Reference Manual

Analytical Balances

XSR

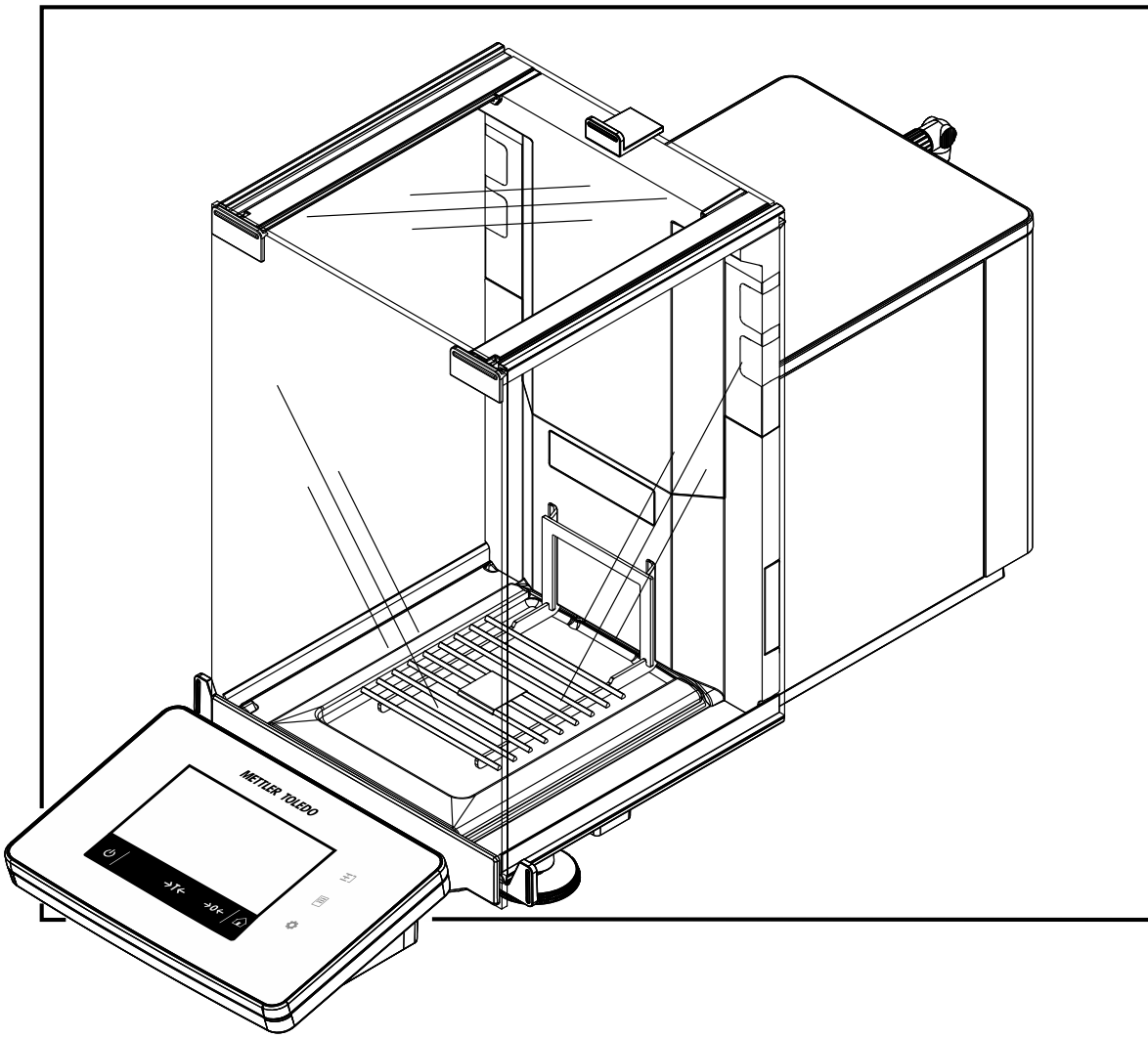

METTLER TOLEDO

Table of Contents

1 Introduction

Thank you for choosing a METTLER TOLEDO balance. The balance combines high performance with ease of use.

This document is based on the software version V 2.0.501.

EULA

The software in this product is licensed under the METTLER TOLEDO End User License Agreement (EULA) for Software.

When using this product you agree to the terms of the EULA.

▶ www.mt.com/EULA

1.1 Further documents and information

This document is available in other languages online.

▶ www.mt.com/XSR-analytical-RM

Product page:

▶ www.mt.com/XSR-analytical

Instructions for cleaning a balance, "8 Steps to a Clean Balance":

▶ www.mt.com/lab-cleaning-guide

Search for software:

▶ www.mt.com/labweighing-software-download

Search for documents:

▶ www.mt.com/library

For further questions, please contact your authorized METTLER TOLEDO dealer or service representative.

▶ www.mt.com/contact

1.2 Explanation of conventions and symbols used

Conventions and symbols

Key and/or button designations and display texts are shown in graphic or bold text, e.g., ✎, **Edit**.

i **Note**	For useful information about the product.
	Refers to an external document.

Elements of instructions

In this manual, step-by-step instructions are presented as follows. The action steps are numbered and can contain prerequisites, intermediate results and results, as shown in the example. Sequences with less than two steps are not numbered.

- Prerequisites that must be fulfilled before the individual steps can be executed.

1 Step 1

  ➡ Intermediate result

2 Step 2

➡ Result

1.3 Acronyms and abbreviations

Original term	Explanation
AC	Alternating Current
ASTM	American Society for Testing and Materials

DC	Direct Current
EMC	Electromagnetic Compatibility
FCC	Federal Communications Commission
GWP	Good Weighing Practice
HID	Human Interaction Device
ID	Identification
LED	Light-Emitting Diode
LPS	Limited Power Source
MAC	Media Access Control
MT-SICS	METTLER TOLEDO Standard Interface Command Set
NA	Not Applicable
OIML	Organisation Internationale de Métrologie Légale (International Organization of Legal Metrology)
RAM	Random Access Memory
RFID	Radio-frequency identification
RM	Reference Manual
SELV	Safety Extra Low Voltage
SOP	Standard Operating Procedure
SQC	Statistical Quality Control
UM	User Manual
USB	Universal Serial Bus
USP	United States Pharmacopeia

1.4 Product range

1.4.1 XSR analytical balances

Balance	Models designation
	Readability: **0.01 mg** • XSR105 • XSR105DU • XSR205DU • XSR225DU
	Readability: **0.1 mg** • XSR64 • XSR104 • XSR204 • XSR204DR • XSR304

1.5 Compliance information

National approval documents, e.g., the FCC Supplier Declaration of Conformity, are available online and/or included in the packaging.

▶ www.mt.com/ComplianceSearch

Contact METTLER TOLEDO for questions about the country-specific compliance of your instrument.

▶ www.mt.com/contact

United States of America

This equipment has been tested and found to comply with the limits for a **Class A** digital device, pursuant to part 15 of the FCC Rules. These limits are designed to provide reasonable protection against harmful interference when the equipment is operated in a commercial environment. This equipment generates, uses, and can radiate radio frequency energy and, if not installed and used in accordance with the instruction manual, may cause harmful interference to radio communications. Operation of this equipment in a residential area is likely to cause harmful interference in which case the user will be required to correct the interference at his own expense.

This device complies with Part 15 of the FCC Rules. Operation is subject to the following two conditions:

1. This device may not cause harmful interference.
2. This device must accept any interference received, including interference that may cause undesired operation.

Changes or modifications not expressly approved by the party responsible for compliance could void the user's authority to operate the equipment.

2 Safety Information

Two documents named "User Manual" and "Reference Manual" are available for this instrument.

- The User Manual is printed and delivered with the instrument.
- The electronic Reference Manual contains a full description of the instrument and its use.
- Keep both documents for future reference.
- Include both documents if you transfer the instrument to other parties.

Only use the instrument according to the User Manual and the Reference Manual. If you do not use the instrument according to these documents or if the instrument is modified, the safety of the instrument may be impaired and Mettler-Toledo GmbH assumes no liability.

2.1 Definitions of signal words and warning symbols

Safety notes contain important information on safety issues. Ignoring the safety notes may lead to personal injury, damage to the instrument, malfunctions and false results. Safety notes are marked with the following signal words and warning symbols:

Signal words

DANGER	A hazardous situation with high risk, resulting in death or severe injury if not avoided.
WARNING	A hazardous situation with medium risk, possibly resulting in death or severe injury if not avoided.
CAUTION	A hazardous situation with low risk, resulting in minor or moderate injury if not avoided.
NOTICE	A hazardous situation with low risk, resulting in damage to the instrument, other material damage, malfunctions and erroneous results, or loss of data.

Warning symbols


General hazard


Notice

2.2 Product-specific safety information

Intended use

This instrument is designed to be used by trained staff. The instrument is intended for weighing purposes.

Any other type of use and operation beyond the limits of use stated by Mettler-Toledo GmbH without consent from Mettler-Toledo GmbH is considered as not intended.

Responsibilities of the instrument owner

The instrument owner is the person holding the legal title to the instrument and who uses the instrument or authorizes any person to use it, or the person who is deemed by law to be the operator of the instrument. The instrument owner is responsible for the safety of all users of the instrument and third parties.

Mettler-Toledo GmbH assumes that the instrument owner trains users to safely use the instrument in their workplace and deal with potential hazards. Mettler-Toledo GmbH assumes that the instrument owner provides the necessary protective gear.

Safety notes

⚠ WARNING

Death or serious injury due to electric shock

Contact with parts that carry a live current can lead to death or injury.

1 Only use the METTLER TOLEDO power cable and AC/DC adapter designed for your instrument.
2 Connect the power cable to a grounded power outlet.
3 Keep all electrical cables and connections away from liquids and moisture.
4 Check the cables and the power plug for damage and replace them if damaged.

NOTICE

Damage to the instrument or malfunction due to the use of unsuitable parts

– Only use parts from METTLER TOLEDO that are intended to be used with your instrument.

3 Design and Function

3.1 Function description

The XSR line comprises a range of balances that differ from each other due to their weighing range and resolution. The balances of the XSR line combine a large number of weighing and adjustment possibilities with a simple operation handling.

The following features are common to all models of the XSR analytical line:

- 4.3-inch capacitive color TFT-touch screen.
- fully automatic adjustment using internal weights
- various methods that can be defined individually
- various routine tests that can be defined individually
- History about performed tests and adjustments.
- Motor driven side doors.
- Easily removable draft shield elements.
- built-in level sensor and leveling aid for fast and easy leveling

3.2 Overview balance

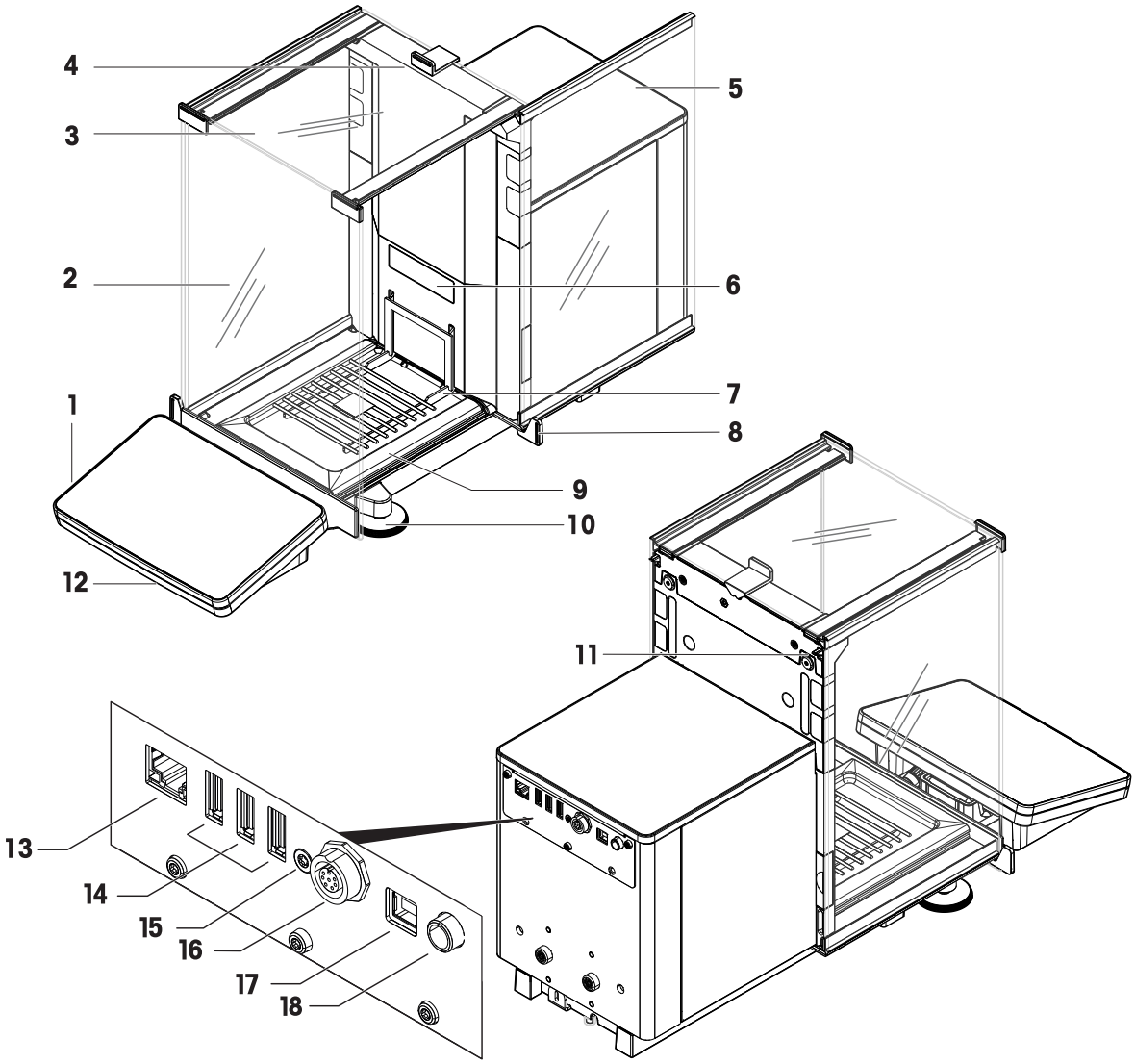

1	Terminal	**10**	Leveling feet
2	Front panel draft shield	**11**	Side door release lever
3	Top door draft shield	**12**	StatusLight
4	Handle for top door	**13**	Ethernet port
5	Side door draft shield (right/left)	**14**	USB-A ports (to device)
6	Model label	**15**	Service seal
7	Weighing pan	**16**	Socket for terminal connection cable
8	Door handle	**17**	USB-B port (to host)
9	Drip tray	**18**	Socket for power adapter

3.3 Components description

3.3.1 Draft shield

The draft shield is a housing device that protects the weighing area against environmental impacts like drafts or moisture. The side doors can be opened manually or automatically. The top door can be opened manually.

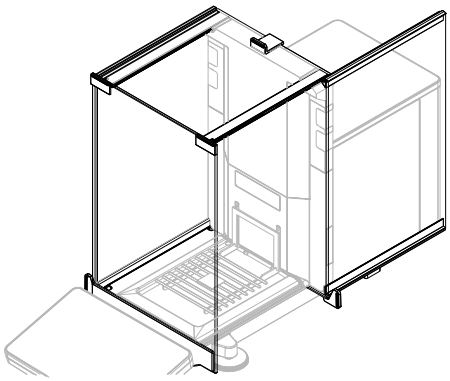

3.3.2 Weighing pan

The SmartGrid weighing pan is the load receptor that serves directly to accommodate the weighing item.

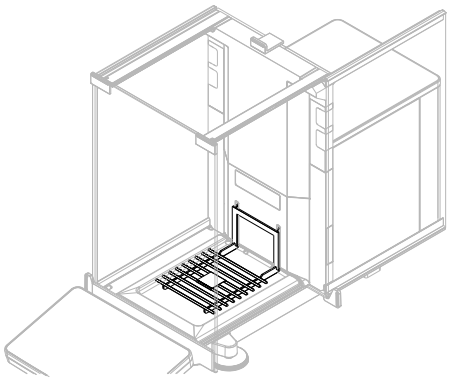

3.3.3 Drip tray

The drip tray is positioned below the weighing pan on the weighing chamber base plate. The primary purpose of a drip tray to ensure quick cleaning of the balance.

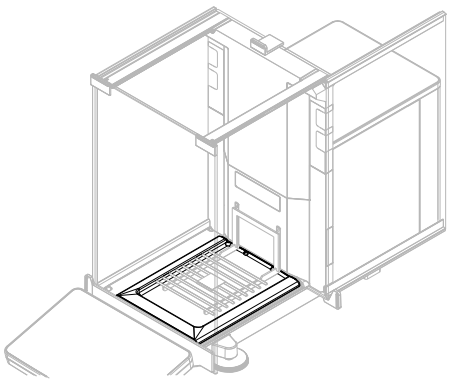

3.3.4 Door handle

The door handles are mounted on the door slides and are used to open the side and top doors of the draft shield manually.

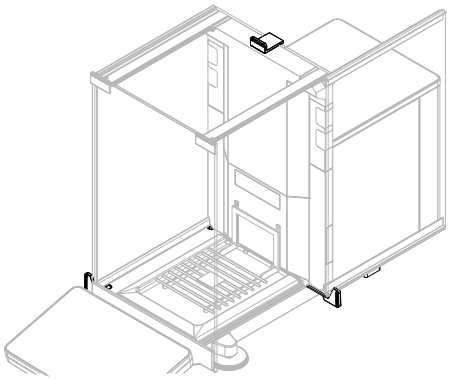

3.3.5 Leveling feet

The balance stands on two height-adjustable feet. These feet are used to level the balance.

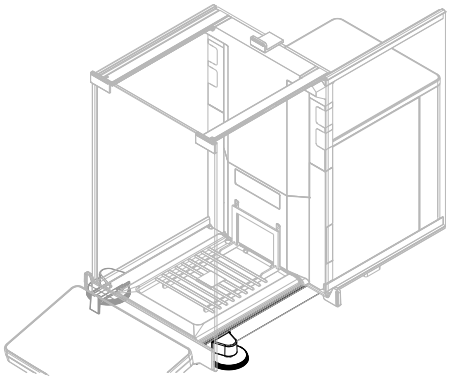

3.3.6 Terminal

The 4.3-inch balance terminal has a touch sensitive display. Further, on the front side of the terminal is a StatusLight LED strip that indicates the current status of the balance.

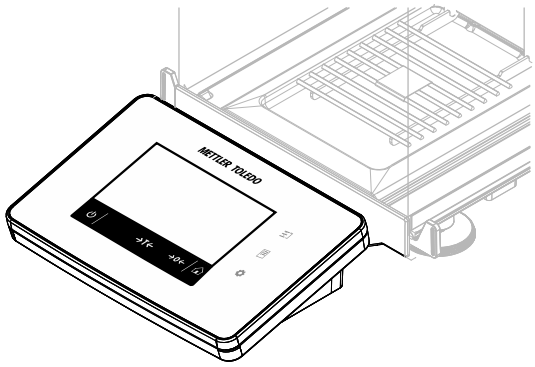

3.3.7 Side door release lever

The side door release lever is located on the back side of the partition panel and locks/unlocks the draft shield side door.

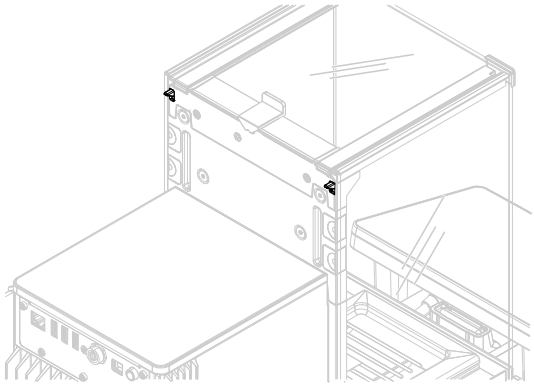

3.4 Overview terminal

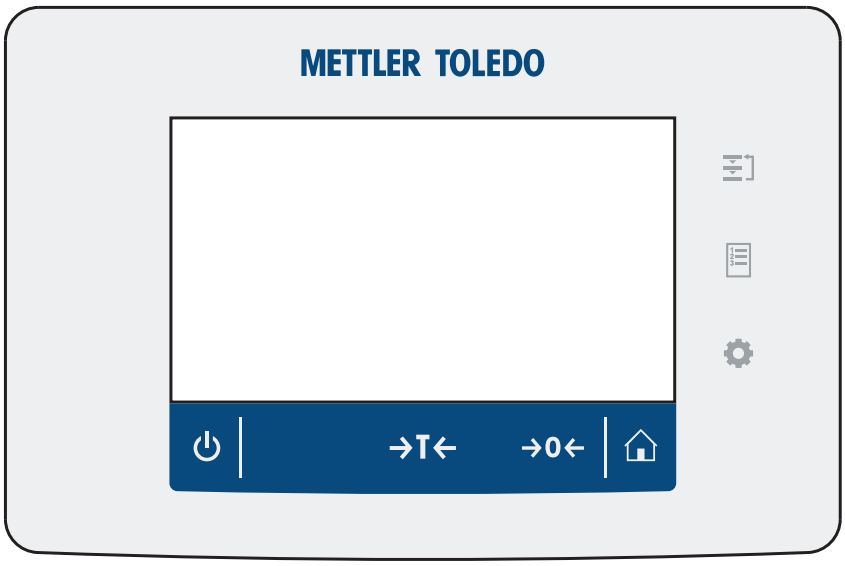

	Name	Description
⏻	**Standby**	By tapping ⏻, the balance is not completely switched off but goes into standby mode. To switch the balance completely off, it must be unplugged from the power supply. **Note** Do not disconnect the balance from the power supply unless the balance is not used for an extended period of time. After switching on the instrument, it must warm up before giving accurate results.
→T←	Tare	Tares the balance. This function is used when the weighing process involves containers. After taring the balance, the screen shows Net which indicates that all displayed weights are net.
→0←	Zero	Zeroes the balance. The balance must always be zeroed before starting the weighing process. After zeroing, the balance sets a new zero point.
⌂	Home	To return from any menu level to the main weighing screen.
↕	Open/close door	Opens the weighing chamber door to the left or to the right (default value).

	Name	Description
	Methods	Opens the section **Methods**.
	Results	Opens the **Results list**.
	Balance menu	Opens the section **Balance menu**.

3.5 Overview type label

The information on the type label helps to identify the balance and terminal.

Type label of the terminal

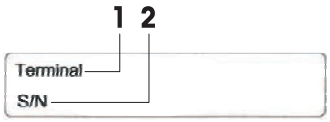

1. Terminal type
2. Terminal serial number

Type label of the balance

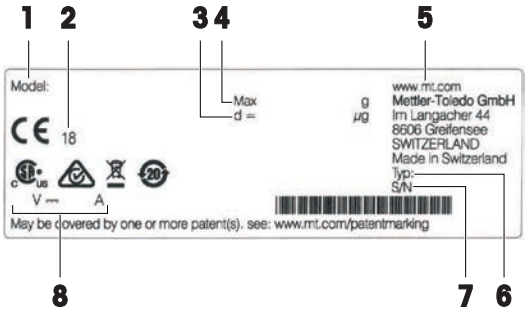

1. Balance model
2. Year of manufacture
3. Readability
4. Maximum capacity
5. Manufacturer
6. Balance type
7. Balance serial number
8. Power consumption

3.6 User interface

3.6.1 Main sections at a glance

The main weighing screen (1) is the central navigation point where all the menus and settings can be found. The **Balance menu** (2), **Methods** (3) and **Results** (4) open when pressing the symbols on the terminal.

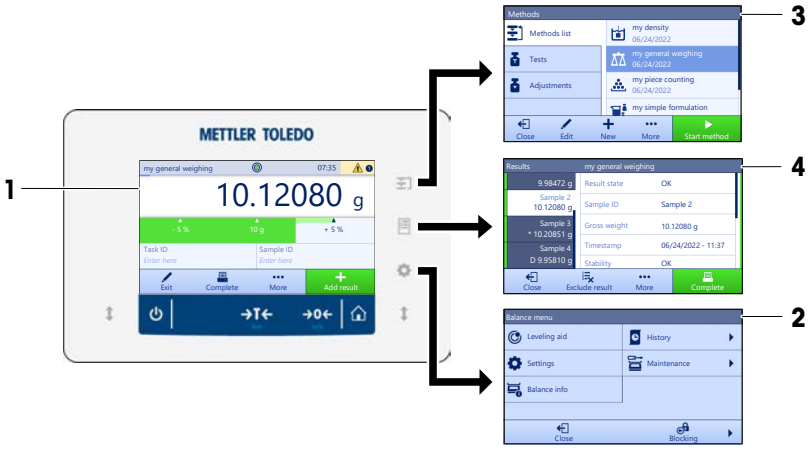

See also

- Main weighing screen ▸ Page 18
- Panel "Balance menu" ▸ Page 18
- Panel "Methods" ▸ Page 19
- Panel "Results" ▸ Page 19

3.6.2 Main weighing screen

	Name	Description
1	Weighing value field	Shows the current weighing value.
2	Level indicator	Indicates if the balance is leveled (green) or not (red).
3	Warning and error message area	Shows current warning and/or error messages.
4	Button **Add result**	Adds the result to the **Results list**. Depending on the selected method, the button can have different functions.
5	Action bar	Contains actions referring to the current task.
6	Method information area	Contains information about the sample, method or task IDs.
7	SmartTrac	Used as a weighing aid to define a target weight with upper and lower tolerances.
8	Weighing value area	Shows the results of the current weighing process.
9	**Method name**	Shows the name of the current method.

3.6.3 Panel "Balance menu"

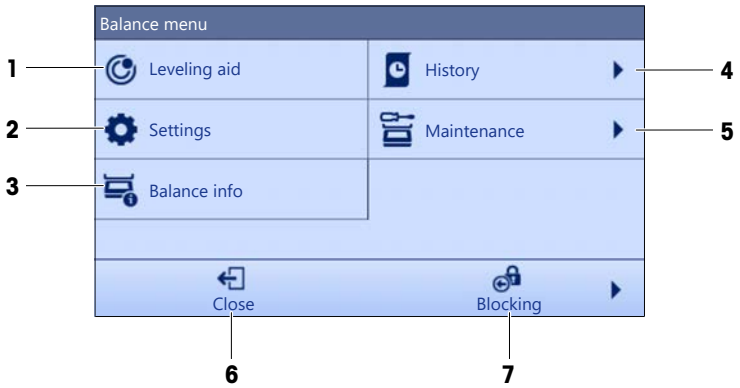

	Name	Description
1	**Leveling aid**	Opens the leveling dialog.

	Name	Description
2	**Settings**	Opens the complete settings dialog.
3	**Balance info**	Shows the balance information.
4	**History**	Opens the history dialog.
5	**Maintenance**	Opens the balance maintenance dialog.
6	**Close**	Closes the balance dialog.
7	**Blocking**	Opens the block balance dialog.

3.6.4 Panel "Methods"

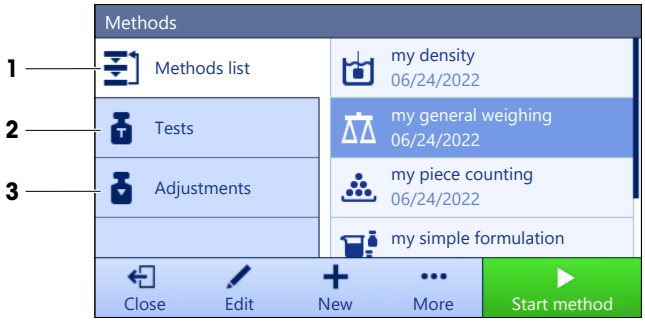

	Name	Description
1	**Methods list**	Lists the methods already defined by the user. Methods can be created, edited, cloned, started, or deleted.
2	**Tests**	Lists the tests already defined by the user. • Sensitivity tests • Repeatability tests • Eccentricity tests Routine tests can be created, edited, started, or deleted. A list of the tests previously performed is available in the **History**.
3	**Adjustments**	Shows the currently selected internal or external adjustment. The adjustment can be edited or started. A list of the adjustments previously performed is available in the **History**.

See also

History ▸ Page 70

3.6.5 Panel "Results"

	Name	Description
1	**Result state**	Shows the state of the weighing process.
2	**Sample ID**	Shows the **Sample ID** of the weighing.
3	**Gross weight**	Shows the gross weight. **D**: indicates that the value was unstable. This might occur when the **Weighing mode** is set to **Immediate**. *: indicates that the value was calculated. This might occur, for example, when the **Tare Mode** is set to **Preset tare**.
4	Timestamp	Shows the individual timestamp of each weighing item.
5	Balance status	Shows stability, level state of the balance, minimum weight, tolerance state and test and adjustment state.
6	**Complete**	Opens the dialog **Complete task**. • **Print task label manually** • **Print results manually**
7	**More**	Opens the dialog **More**. • **Start adjustment** • **Change display unit** • **Configure tare** • **Configure zero** • **Save as method (itemized)** (only available for methods with the option **Weighing items**)
8	**Exclude result**	Excludes the current result from the **Results list**. A comment can be added to the excluded result, e.g., to describe the reason of the exclusion. Depending on the format of the results printout, the excluded result can be printed or not.
9	**Close**	Closes the **Results list** and goes back to the main weighing screen.

3.6.6 Icons and symbols

3.6.6.1 System status icons

System messages can appear due to a user action, a user input or a system process. Some messages leave it up to the user to choose upon acting, they will disappear after acknowledging. Other messages remain persistent, so the user can defer them but eventually has to handle them. These messages can be seen in the main status bar on the upper right-hand side of the display.

Icon	Name	Description
	Leveled	More details about the leveling status are displayed when tapping the level status.
	Out of level	The balance must be leveled. Information about leveling the balance can be found in the section Leveling the balance.
	Information	Information messages appear due to user actions or system processes and offer opportunities that are related to the current action or process.
	Warning	Warning messages appear due to user actions or system processes that could lead to a problem that can be prevented.
	Error	Error messages appear due to user actions or system processes that have failed. It is mostly still possible to handle such a problem.

3.6.6.2 Weighing status icons

Weighing status icons appear due to the weight value matching certain quality criteria. The information on the status can be looked by tapping on any of the visible weighing status icons.

Icon	Name	Description
	Stability indicator	When the stability indicator appears, the balance is not stable. Make sure that the balance is placed at an adequate location. Information about the adequate location can be found in the section Selecting the location.
Net	Net indicator	Appears when the tare key has been pressed and the tare weight has been subtracted.
	Calculated value	The current weight value is calculated. This symbol only appears in the weighing value area when a container has been used with the function **Preset tare**.
	Minimum weight violation	The current weight value is smaller than the defined minimum weight. Make sure that the weight is larger than the minimum weight.
GWP	Balance invalid	The current balance configuration is invalid or quality criteria have not been fulfilled according to the GWP approved definition.
GWP	Weight not ready	The current weight measurement is not ready according to the GWP approved definition. This can be caused by an overload, an underload, or a minimum weight violation.
GWP	Weight ready	The current weight measurement is ready according to the GWP approved definition. It can be added to the **Results list**.
	External ionizer discharging	The external ionizer is currently discharging.

3.6.6.3 Process status icons

The status of the processes running on the balance is indicated by a small icon on the bottom right corner of the icon of the associated process. This applies to **Tests** and **Adjustments**.

Icon	Name	Description
	Running	The process is currently running.
	Scheduled	The process is scheduled.
	Information	Information is available about the process, e.g., a reminder.
	Overdue	The process is overdue.

4 Installation and Putting into Operation

4.1 Selecting the location

A balance is a sensitive precision instrument. The location where it is placed will have a profound effect on the accuracy of the weighing results.

Requirements of the location

Place indoors on stable table

Ensure sufficient spacing

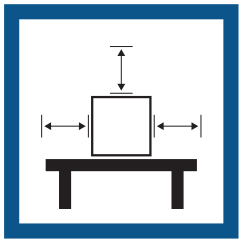

Level the instrument

Provide adequate lighting

Avoid direct sunlight

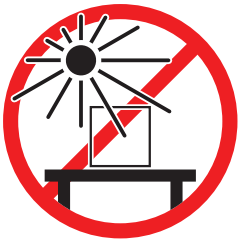

Avoid vibrations

Avoid strong drafts

Avoid temperature fluctuations

Sufficient spacing for balances: > 15 cm all around the instrument

Take into account the environmental conditions. See "Technical Data".

4.2 Unpacking the balance

Check the package, the packaging elements and the delivered components for damages. If any components are damaged, please contact your METTLER TOLEDO service representative.

Note

Depending on the balance model, the components may look different. The procedure is always the same.

1 Open the box and lift the package out using the lifting strap (**1**).

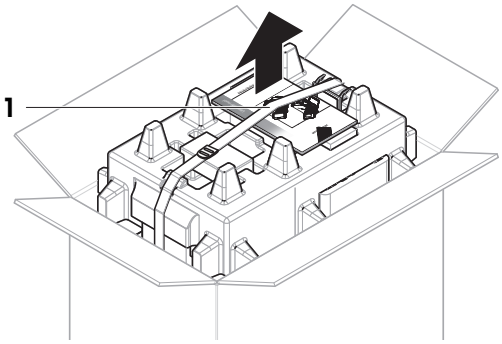

2 Open the lifting strap (**1**) and remove the User Manual (**2**).

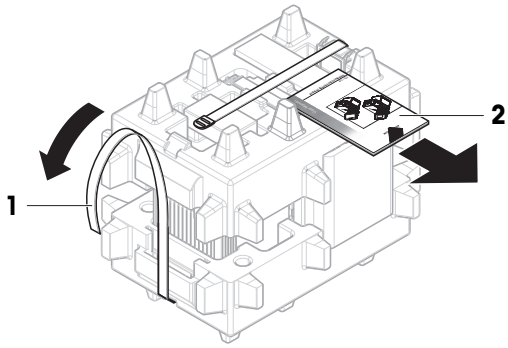

3 Remove the upper part of the package and remove the set with the AC adapter and power cable (**3**), the box containing several accessories (**4**), and the weighing pan (**5**).

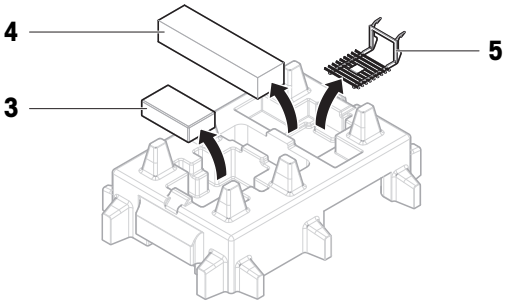

4 Carefully remove the terminal (**6**).

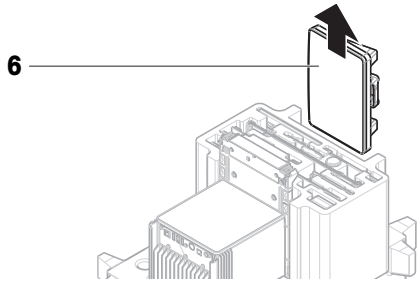

5 Carefully remove the package set with the draft shield doors and the display holder (**7**).

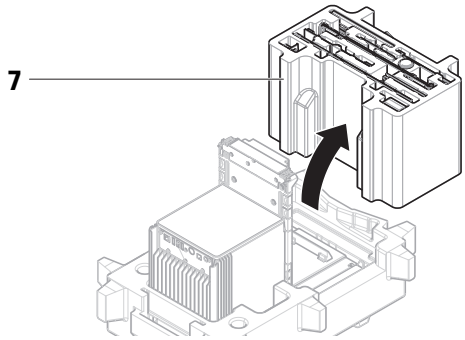

6 Carefully remove the weighing unit (**8**) from the bottom packaging.
7 Remove the protective bag.
8 Store all parts of the packaging in a safe place for future use.

➡ The weighing unit is ready for assembling.

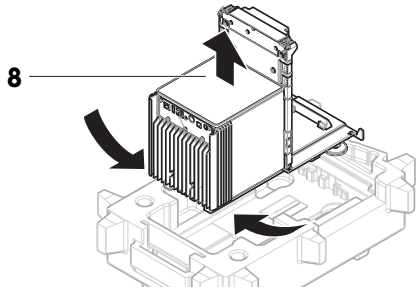

4.3 Scope of delivery

Balance

- Weighing unit
- Draft shield
- Drip tray and weighing pan
- Terminal with terminal holder and terminal connection cable
- AC/DC adapter with country-specific power cable

Documentation

- User Manual
- Production certificate
- Declaration of Conformity

Accessories

- ErgoClip basket
- SmartPrep, 2 pcs
- Brush

4.4 Installation

4.4.1 Attaching the terminal

NOTICE

Damage to the cables due to careless handling

– Do not kink or twist the cables.

1 Insert the slides of the display holder (**1**) into the front of the weighing unit (**2**).

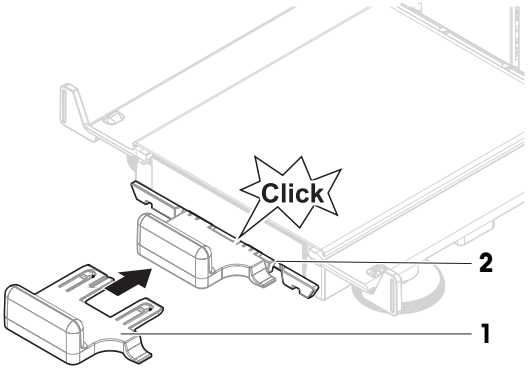

2 Connect the terminal cable (**3**) with the terminal (**4**). Consider the pin assignment.

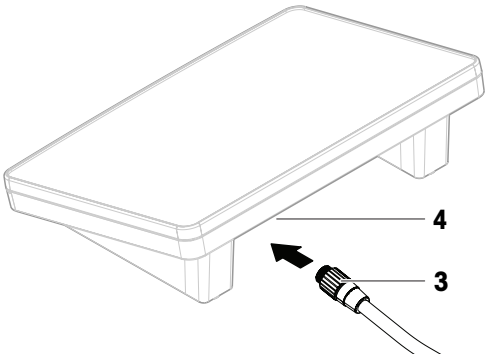

3 Place the terminal (**5**) onto the terminal holder (**6**).

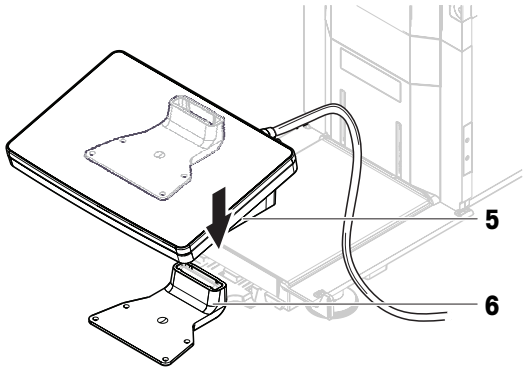

4 Carefully tilt the balance to its side.
5 Lead the cable (**7**) through the cable channel (**8**).
6 Carefully put the balance back on its feet.

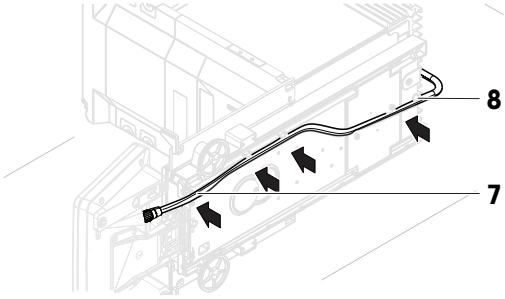

7 Insert the terminal cable (**9**) into the socket of the balance (**10**). Consider the pin assignment.
➡ The terminal is ready.

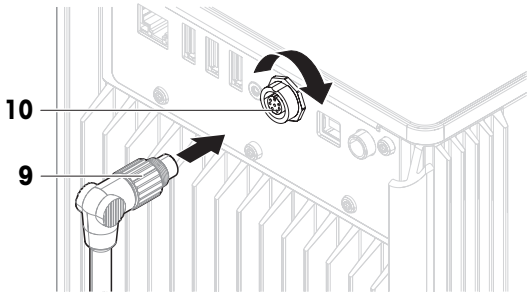

4.4.2 Assembling the balance

⚠ CAUTION

Injury due to sharp objects or broken glass

Instrument components, e.g., glass, can break and lead to injuries.

– Always proceed with focus and care.

Note

Depending on the balance model, the components may look different. The procedure is always the same.

1 Insert the drip tray (**1**).
2 Carefully mount the weighing pan (**2**).

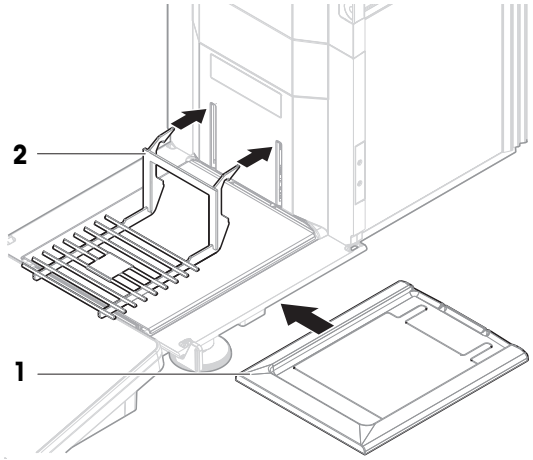

3 Place the side doors (**3**) into the grooves of the door slides (**4**) and tilt them up until they engage with the door lever (**5**). Consider the marks on the bottom frames (L = left / R = right).

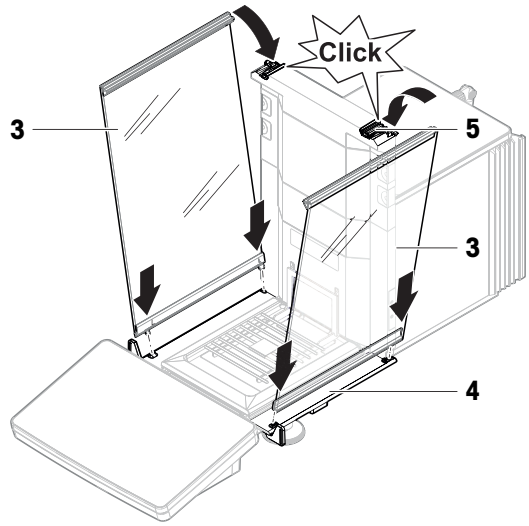

4 Insert the front panel (**6**) into the grooves (**7**) and tilt it up until it engages.
5 Open the side doors.

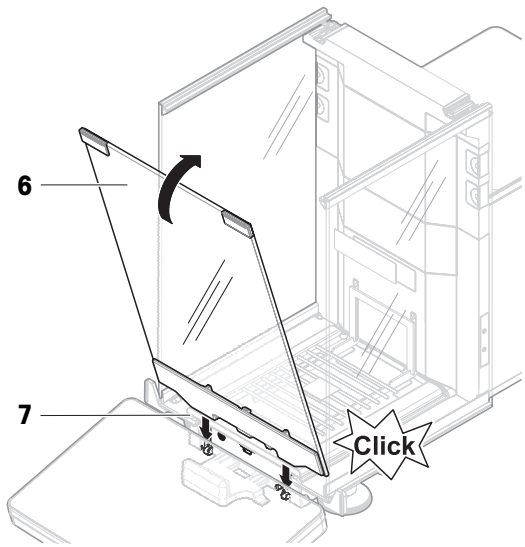

6 Fit the top door (**8**) along the top frame of the side doors and into the rails of the back wall (**9**).
7 Push the top door (**8**) towards the front.
8 Close the side doors.
➡ The balance is assembled and ready to be put into operation.

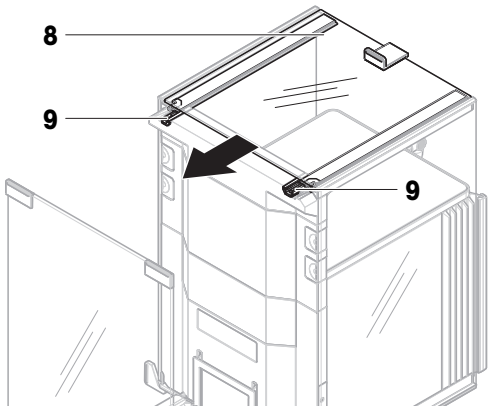

4.5 Putting into operation

4.5.1 Connecting the balance

⚠ WARNING

Death or serious injury due to electric shock

Contact with parts that carry a live current can lead to death or injury.

1 Only use the METTLER TOLEDO power cable and AC/DC adapter designed for your instrument.
2 Connect the power cable to a grounded power outlet.
3 Keep all electrical cables and connections away from liquids and moisture.
4 Check the cables and the power plug for damage and replace them if damaged.

1 Install the cables in such a way that they cannot be damaged or interfere with operation.
2 Insert the plug of the AC/DC adapter (**1**) into the power socket of the instrument.
3 Secure the plug by firmly tightening the knurled nut.
4 Insert the plug of the power cable into a grounded power outlet that is easily accessible.
➡ The balance automatically switches on.
➡ The draft shield opens and closes for initialization.

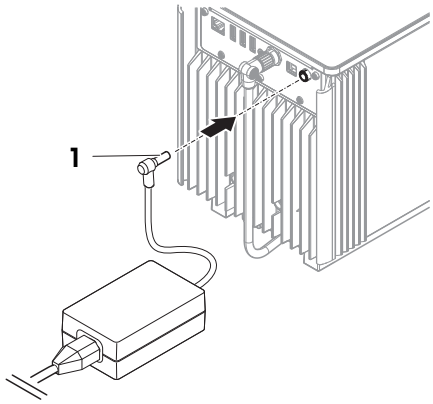

i Note

Do not connect the instrument to a power outlet controlled by a switch. After switching on the instrument, it must warm up before giving accurate results.

See also

General data ▸ Page 146

4.5.2 Switching on the balance

When connected to the power supply, the balance automatically switches on.

EULA (End User License Agreement)

When the balance is switched on the first time, the EULA (End User License Agreement) appears on the screen.

1 Read the conditions.

2 Tap **I accept the terms in the license agreement.** and confirm with ✓ **OK**.

➡ The main weighing screen appears.

Acclimatization and warm up

Before the balance gives reliable results, it must:

- acclimatize to the room temperature
- warm up by being connected to the power supply

The acclimatization time and warm-up time for balances are available in "General data".

Note

When the balance is exiting standby, it is ready immediately.

See also

General data ▸ Page 146

Entering / Exiting standby mode ▸ Page 28

4.5.3 Leveling the balance

Exact horizontal and stable positioning are essential for repeatable and accurate weighing results.

If the message **Balance is out of level** appears:

1 Tap ▶ **Level the balance**.

➡ The **Leveling aid** opens.

2 Turn both leveling feet (**1**) as instructed on the display until the dot is in the center of the level indicator.

The leveling aid can also be accessed through the **Balance menu**:

Navigation: ⚙ Balance menu > ◎ Leveling aid

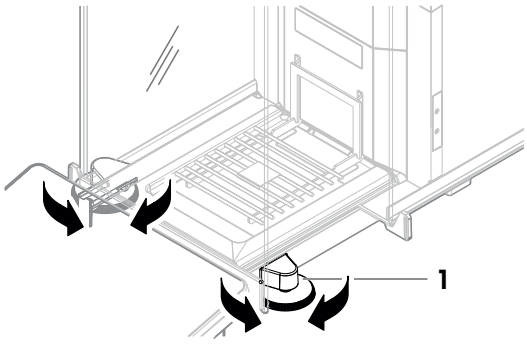

4.5.4 Performing an internal adjustment

Navigation: Methods > Adjustments

■ The adjustment **Strategy** is set to **Internal adjustment**.

1 Open the **Methods** section, tap **Adjustments**, select the adjustment, and tap ▶ **Start**

- or -

from the main weighing screen, tap ••• **More** and tap **Start adjustment**.

➡ **Internal adjustment** is being executed.

➡ When the adjustment has been completed, an overview of the adjustment results appears.

2 Tap **Print** if you want to print the results.

3 Tap ✓ **Finish adjustment**.

➡ The balance is ready.

4.5.5 Entering / Exiting standby mode

1 To enter standby mode, hold ⏻.

➡ The display is dark. The balance is still switched on.

2 To exit standby mode, press ⏻.

➡ The display is turned on.

4.5.6 Switching off the balance

To completely switch off the balance, it must be disconnected from the power supply. By holding ⏻, the balance goes only into standby mode.

Note

When the balance was completely switched off for some time, it must warm up before it can be used.

See also

Switching on the balance ▸ Page 27

4.6 Performing a simple weighing

4.6.1 Opening and closing the draft shield doors

– Open the door manually with the door handle (1) or touch the key ↕ on the terminal (2).

The doors can be configured to open and close in different ways.

See also

Doors ▸ Page 76

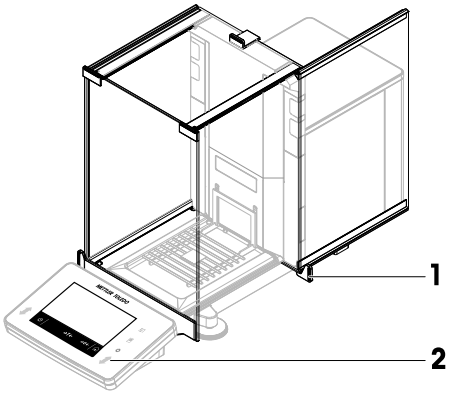

4.6.2 Zeroing the balance

1 Open the draft shield.
2 Clear the weighing pan.
3 Close the draft shield.
4 Press →0← to zero the balance.
➡ The balance is zeroed.

4.6.3 Taring the balance

If a sample vessel is used, the balance must be tared.

1 Open the draft shield.
2 Clear the weighing pan.
3 Close the draft shield.
4 Press →0← to zero the balance.
5 Open the draft shield.
6 Place the sample vessel (**1**) on the weighing pan (**2**).
7 Close the draft shield.
8 Press →T← to tare the balance.
➡ The balance is tared. The icon Net appears.

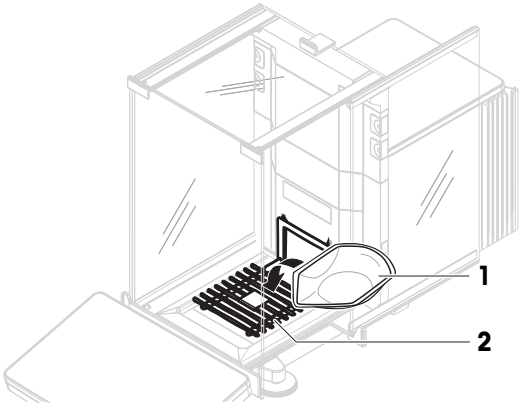

4.6.4 Performing a weighing

1 Open the draft shield.

2 Place the weighing object into the sample vessel.
3 Close the draft shield.
4 Tap ➕ **Add result** if you want to report the weighing result.
➡ The result is added to the **Results list**.

4.6.5 Completing the weighing

1 To save the **Results list**, tap 🖶 **Complete**.
➡ The window **Complete task** opens.
2 Select an option to save or print the **Results list**.
➡ The respective dialog opens.
3 Follow the instructions from the wizard.
4 Tap ✓ **Complete**.
➡ The **Results list** is saved/printed and then cleared.

4.7 Transporting, packing and storing

4.7.1 Transporting the balance over short distances

1 Disconnect the AC/DC adapter and unplug all interface cables.
2 Hold the weighing platform with both hands and carry the balance in horizontal position to the target location. Consider the requirements of the location.

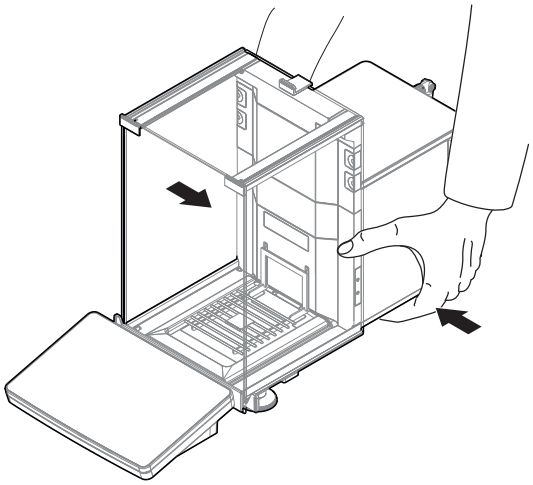

If you want put the balance into operation, proceed as follows:
1 Connect in reverse order.
2 Level the balance.
3 Perform an internal adjustment.

See also

🔗 Selecting the location ▸ Page 22
🔗 Leveling the balance ▸ Page 28
🔗 Performing an internal adjustment ▸ Page 28

4.7.2 Transporting the balance over long distances

METTLER TOLEDO recommends using the original packaging for transportation or shipment of the balance or balance components over long distances. The elements of the original packaging are developed specifically for the balance and its components and ensure maximum protection during transportation.

See also

🔗 Unpacking the balance ▸ Page 22

4.7.3 Packing and storing

Packing the balance

Store all parts of packaging in a safe place. The elements of the original packaging are developed specifically for the balance and its components, and ensures maximum protection during transportation and storage.

Storing the balance

Only store the balance under the following conditions:
- Indoor and in the original packaging
- According to the environmental conditions, see "Technical Data"

Note

When storing for longer than 6 months, the rechargeable battery may become empty (only date and time get lost).

See also

Technical Data ▸ Page 146

4.8 Weighing below the balance

Your balance is equipped with a weighing hook for performing weighing operations below the work surface (weighing below the balance).

- A weighing table or workbench is available, through which the weighing hook can be accessed.

1 Disconnect the balance from the AC/DC adapter.
2 Disconnect all interface cables.
3 Carefully tilt the balance to its side.
4 Loosen the screw (**1**) of the weighing hook cover (**2**).
   ➡ The hook (**3**) is accessible.
5 Rotate the cover 180°.
6 Tighten the screw to secure the cover.
7 Carefully put the balance back on its feet.
8 Reconnect the AC/DC adapter and the interface cables.

➡ The weighing hook is accessible and can be used for below-the-balance weighing.

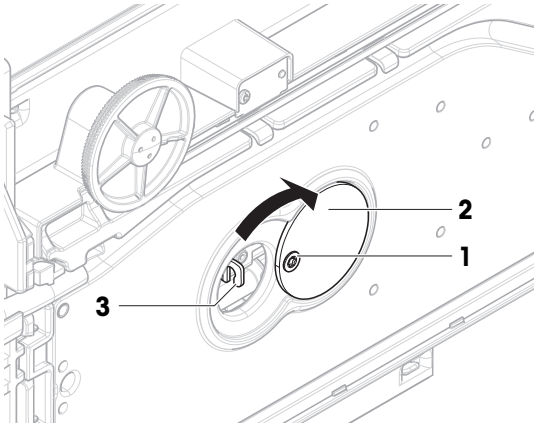

See also

Dimensions ▸ Page 151

5 Operation

5.1 Touch screen

5.1.1 Selecting or activating an item

– Tap the item or function to be selected or activated.

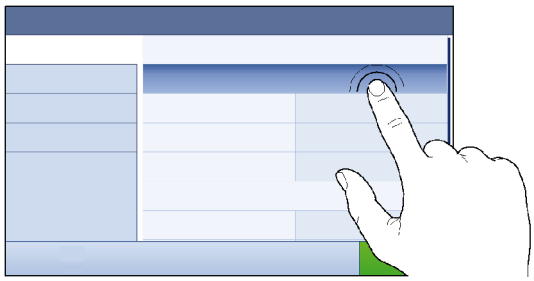

5.1.2 Scrolling

– Move the list up/down.

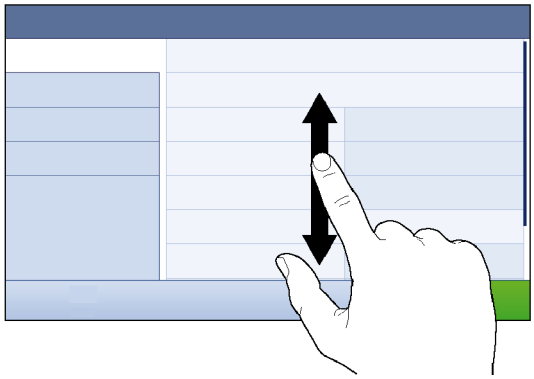

5.1.3 Entering characters and numbers

When tapping on fields that require letters, numbers, or special characters, a keyboard appears on the display.

	Name	Description
1	Input field	Shows the data that has been entered.
2	Backspace	Deletes the character left of the current cursor position. The cursor can be positioned by using the touch screen.
3	Confirm	Confirms the entered data.
4	Discard	Closes the keyboard dialog.
5	Numbers and special characters	Switches into the special character mode.
6	Shift	Switches between lower or upper case letters.

5.1.4 Changing the date and time

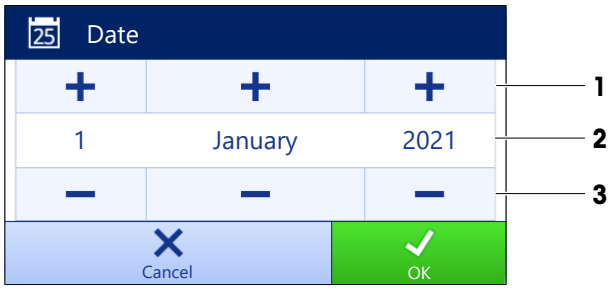

	Name	Explanation
1	Plus button	Increment
2	Display field	Shows the defined time or date.
3	Minus button	Decrement

Note

The format of date and time can be defined in the settings via the options **Date format** and **Time format**.

See also

Date / Time / Language / Format ▸ Page 77

5.2 Methods

A weighing method is an application for carrying out specific weighing tasks. The balance offers the method "General Weighing" with default parameters. You have the possibility to create a maximum of 50 methods and edit the methods. You can use these methods for your weighing task or edit them according to your requirements. Methods can also be deleted or cloned.

To support you while configuring new methods, a configuration wizard leads you through the whole process.

5.2.1 Methods overview

The section **Methods list** provides an overview of all methods already created on the balance. In this section, new methods can be defined and existing methods can be edited, cloned or deleted. It is also the starting point for using any method in a weighing procedure.

Navigation: Methods > Methods list

The following methods are available:

- **General weighing** (see [Method "General weighing" ▸ Page 33])
- **Simple formulation** (see [Method "Simple formulation" ▸ Page 35])
- **Piece Counting** (see [Method "Piece Counting" ▸ Page 37])
- **Titration** (see [Method "Titration" ▸ Page 38])
- **Density determination** (see [Method "Density determination" ▸ Page 39])

5.2.2 Method "General weighing"

The method **General weighing** offers the basic weighing functions (zeroing, taring, weighing). The method is used for simple weighing tasks or to perform a series of check weighing or dosing.

The settings of the weighing item, e.g., target weight and tolerances, can be specified for one or multiple weighing items. Two different methods exist:

- **General weighing**:
  - Select this method if you want to work with a single set of parameters.
- **General weighing (itemized)**:

– Select this method if you want to define the parameters for multiple weighing items. A method with multiple weighing items is particularly useful when the weighing task consists of a series of weighings, each with its own individual parameters, such as target weight, tolerances, etc. For further information, see [Using methods with multiple weighing items (itemized) ▸ Page 42].

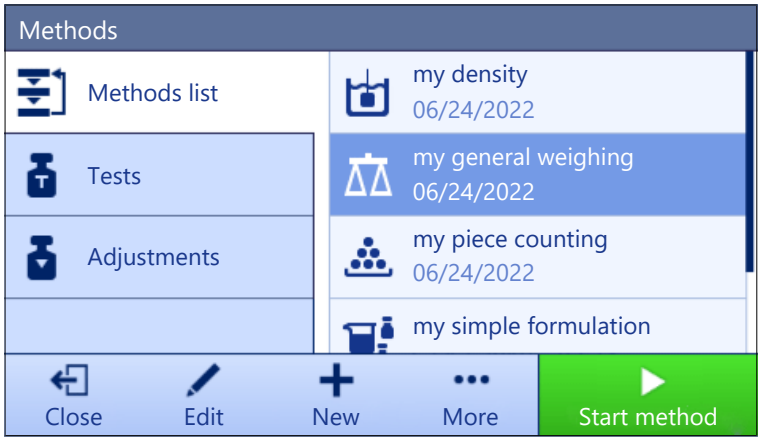

You have the possibility to start with method factory setting parameter or to create a new method with changed method parameter.

For details about method settings:

See also

- Settings: method "General weighing" ▸ Page 82
- Using methods with multiple weighing items (itemized) ▸ Page 42

5.2.2.1 Creating a method "General weighing"

Navigation: Methods > Methods list

1 Tap **+ New** in the action bar.
   ➡ The method wizard opens, starting at **1. Method type**.
2 Tap **Method type** and select the method type **General weighing** or **General weighing (itemized)**.
3 Tap **→ Next**.
   ➡ The method wizard opens the section **2. Identification**.
4 Define the **Method name** and **Result description** and tap **→ Next**.
   ➡ The method wizard opens the section **3. Configuration**.
5 Select a **Tolerance profile** and tap **→ Next**.
   ➡ The method wizard opens the section **4. Save**.
   ➡ If setting up a method with multiple weighing items, the wizard opens the section **4. Weighing items**.
6 Select a weighing item from the list and define the **Sample ID**, **Unit**, **Target weight**, **-Tolerance**, and **+Tolerance**.
7 To add a weighing item, tap **+ Item** or **Clone**.
8 Tap **→ Next**.
   ➡ The method wizard opens the section **5. Save**.
9 Tap **✓ Finish** to save the new method.

➡ The method has been created and appears in the list.

5.2.2.2 Performing a "General weighing"

This section describes a **General weighing** example step by step. Depending on the defined settings and weighing objects, the procedure can be different from this example.

1 Open the **Methods** section.

2 Select a method from the **Methods list** or define a new method.

3 Tap ▶ **Start method**.

➡ The main weighing screen appears with the selected method.

4 Press →0← to zero the balance.

5 Open the door and place the weighing object (1) on the weighing pan (2).

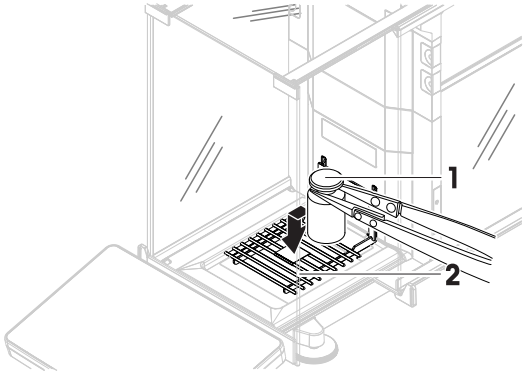

6 Close the door and wait until the weight stabilizes.

➡ The weighing starts with **Capturing weight...**.

7 Tap + **Add result**.

➡ The weighing result is saved to the **Results list**.

8 When the weighing process is finished, tap **Complete** in the action bar.

➡ The window **Complete task** opens. The task-specific information can be printed on a label printer. The **Results list** can be printed manually or automatically (depending on the method settings).

➡ The task **General weighing** was successfully completed.

Note

It is possible to exclude a weighing result from the **Results list**. Open the **Results list**, select a result to exclude, and tap **Exclude result**.
The window **Complete task** always appears after completing the task, even if the results are saved automatically.

5.2.3 Method "Simple formulation"

With the method **Simple formulation** the concentration of a substance can automatically be calculated.

The settings of the weighing item, e.g., target weight and tolerances, can be specified for one or multiple weighing items. Two different methods exist:

- **Simple formulation**:
  - Select this method if you want to weigh a single component in a volumetric flask and have the concentration calculated automatically.
- **Simple formulation (itemized)**:
  - Select this method if you want to follow a predefined solution recipe of one or several components. A method with multiple weighing items is particularly useful when the weighing task consists of a series of weighings, each with its own individual parameters, such as target weight, tolerances, etc. For further information, see [Using methods with multiple weighing items (itemized) ▸ Page 42].

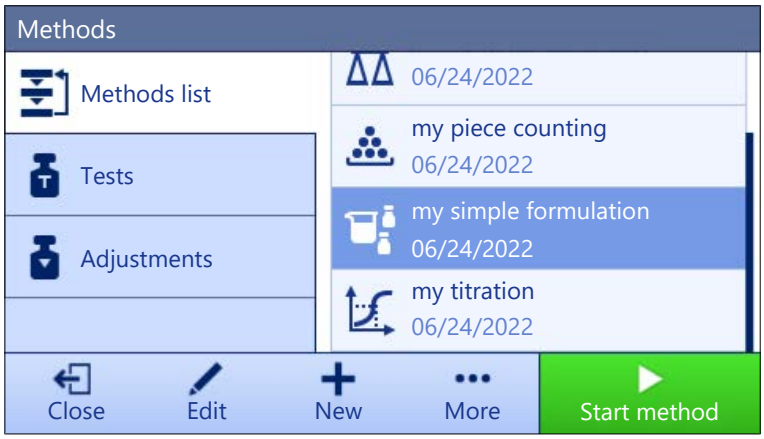

For details about method settings:

See also

Settings: method "Simple formulation" ▸ Page 92
Using methods with multiple weighing items (itemized) ▸ Page 42

5.2.3.1 Creating a method "Simple formulation"

Navigation: Methods > Methods list

1 Tap **+ New** in the action bar.
   ➡ The method wizard opens, starting at **1. Method type**.
2 Tap **Method type** and select the method type **Simple formulation** or **Simple formulation (itemized)**.
3 Tap **→ Next**.
   ➡ The method wizard opens the section **2. Identification**.
4 Define the **Method name** and **Result description** and tap **→ Next**.
   ➡ The method wizard opens the section **3. Configuration**.
5 Select the options for **Calculate concentration per component**, **Calculate amount of component** and set a **Tolerance profile**.
6 Tap **→ Next**.
   ➡ The method wizard opens the section **4. Save**.
   ➡ When selected **Simple formulation (itemized)**, the wizard opens the optional creating section **4. Weighing items**.
7 Select a weighing item from the list and define the **Sample ID**, **Unit**, **Target weight**, **-Tolerance**, and **+Tolerance**.
   ➡ The method wizard opens the section **5. Save**.
8 Tap **✓ Finish** to save the new method.

➡ The method has been created and appears in the list.

5.2.3.2 Performing a "Simple formulation"

This example describes how to perform a **Simple formulation** with two components. It explains the basic functions of the method. Advanced functions such as the calculation of the concentration of a component can be defined in the method settings.

1 Open the **Methods** section.
2 Select a method from the **Methods list** or define a new method.
3 Tap **▶ Start method**.
   ➡ The main weighing screen appears with the selected method.
4 Define the target weight and the tolerance limits for the first component.
5 Select **Component ID** to define the first component.
6 Select **Task ID** to define the whole task.
7 Press **→0←** to zero the balance.
8 Open the door and place the sample vessel on the weighing pan.
9 Press **→T←** to tare the balance.
10 Open the door and add the first component in the sample vessel.
   ➡ The measurement starts.
11 Tap **+ Add result**.
   ➡ The weighing result is saved to the **Results list**.
12 Define the target weight and the tolerance limits for the second component.
13 Select **Component ID** to define the second component.
14 Open the door and add the second component in the sample vessel.

15 Tap ✚ **Add result**.

➡ The weighing result is saved to the **Results list**.

16 Tap 🖶 **Complete** and select if you want to print or export the **Results list**.

➡ The weight task is completed and the balance returns to the main weighing screen.

5.2.4 Method "Piece Counting"

The method **Piece Counting** allows you to determine the number of pieces put on the weighing pan. It is advantageous if all pieces are of approximately equal weight, since the unit quantity is determined on the basis of the average weight of a single piece.

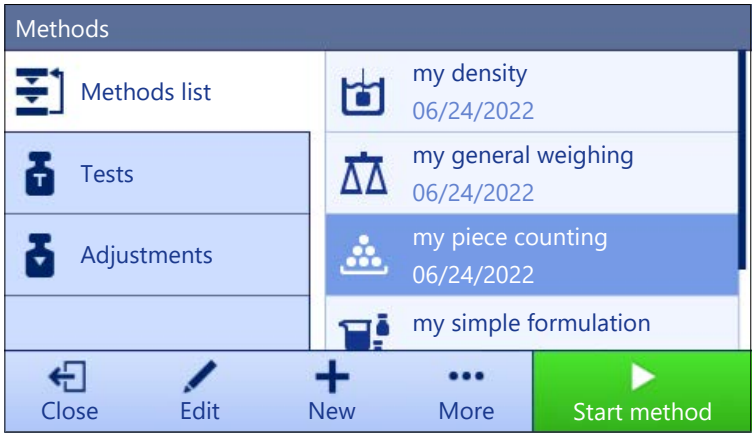

For details about method settings:

See also

🔗 Settings: method "Piece Counting" ▸ Page 101

5.2.4.1 Creating a method "Piece Counting"

≡ **Navigation: Methods > Methods list**

1 Tap ✚ **New** in the action bar.

➡ The method wizard opens, starting at **1. Method type**.

2 Tap **Method type** and select the method type **Piece Counting**.

3 Tap → **Next**.

➡ The method wizard opens the section **2. Identification**.

4 Define the **Method name** and **Result description** and tap → **Next**.

➡ The method wizard opens the section **3. Configuration**.

5 Select a **Tolerance profile** and tap → **Next**.

➡ The method wizard opens the section **4. Weighing item**.

6 Define a reference for pieces **Reference PCS**, a **Reference average weight**, **Target weight** and tap → **Next**.

➡ The method wizard opens the section **5. Save**.

7 Tap ✓ **Finish** to save the new method.

➡ The method has been created and appears in the list.

5.2.4.2 Performing a "Piece Counting"

This section describes how the method **Piece Counting** is being used in a task example. In this example we are weighing pieces in a sample vessel.

1 Open the **Methods** section.

2 Select a method from the **Methods list** or define a new method.

3 Tap ▶ **Start method**.

➡ The main weighing screen with the selected method opens. The balance displays the defined target value, the tolerance and the current average weight of one piece.

4 Press →0← to zero the balance.
or
If a container is used, place the container (1) on the weighing pan (2) and press →T← to tare the balance.

➡ The door closes automatically (depending on the door settings)

➡ The tare-measurement starts with **Taring...**.

➡ When taring is finished, the door opens automatically (depending on the door settings).

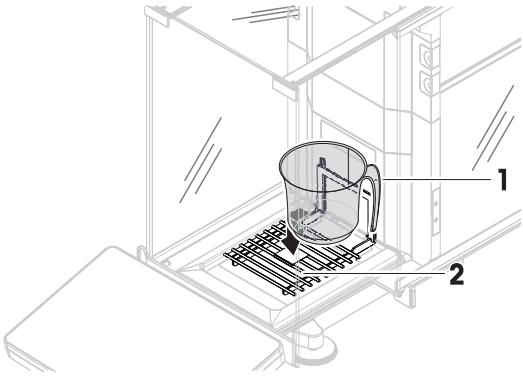

5 If not yet done, enter the average weight for a known number of pieces in the method settings. This serves as reference for the piece counting. Tap to capture the weight of the items on the weighing pan and use it as reference weight.

6 Place the pieces in the sample vessel.

7 Close the door and wait until the weight stabilizes.

8 Tap + **Add result**.

➡ The weighing result is saved to the **Results list**.

9 When the weighing process is finished, tap **Complete** in the action bar.

➡ The window **Complete task** opens. The task-specific information can be printed on a label printer. The **Results list** can be printed manually or automatically (depending on the method settings).

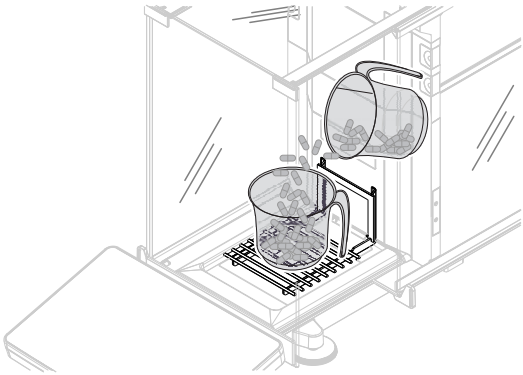

➡ The task **Piece Counting** was successfully completed.

Note

It is possible to exclude a weighing result from the **Results list**. Open the **Results list**, select a result to exclude, and tap **Exclude result**.
The window **Complete task** always appears after completing the task, even if the results are saved automatically.

5.2.5 Method "Titration"

The method **Titration** enables the interaction between the balance and the titrator via MT-SICS.

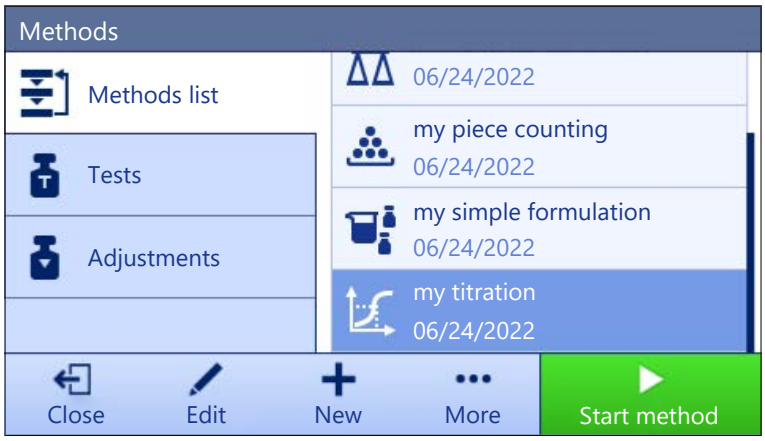

For details about method settings:

See also

Settings: method "Titration" ▸ Page 110

5.2.5.1 Creating a method "Titration"

Navigation: Methods > Methods list

1 Tap **+ New** in the action bar.
   ➡ The method wizard opens, starting at **1. Method type**.
2 Tap **Method type** and select the method type **Titration**.
3 Tap **→ Next**.
   ➡ The method wizard opens the section **2. Identification**.
4 Define the **Method name** and **Result description** and tap **→ Next**.
   ➡ The method wizard opens the section **3. Configuration**.
5 Select a **RFID option**, a **Tolerance profile** and tap **→ Next**.
   ➡ The method wizard opens the section **4. Save**.
6 Tap **✓ Finish** to save the new method.

➡ The method has been created and appears in the list.

5.2.5.2 Performing a "Titration"

This example describes how to prepare a sample for titration and to transfer the information to the METTLER TOLEDO titrator via a USB connection. For more information about how to perform the titration, consult the manual of the titrator.

- A METTLER TOLEDO titrator is connected to the balance via USB.
- A titration method exists in the **Methods list**.

1 Open the **Methods** section.
2 Select the desired titration method from the **Methods list**.
3 Tap **▶ Start method**.
   ➡ The main weighing screen appears with the selected method.
4 Press **→0←** to zero the balance.
5 Open the door and place the sample vessel on the weighing pan.
6 Close the door and wait until the weight stabilizes.
7 Press **→T←** to tare the balance.
8 Open the door and place the sample in the sample vessel.
9 Close the door and wait until the weight stabilizes.
10 Tap **✓ OK** to accept the measurement.
   ➡ The weighing result is saved to the **Results list** and automatically sent to the titrator.
11 Continue your workflow on the titrator.

5.2.6 Method "Density determination"

The method **Density determination** is used for determining the density of solids and liquids. Density determination is carried out based on **Archimedes' principle** according to which a body immersed in a fluid undergoes an apparent loss in weight that is equal to the weight of the fluid it displaces. On the other hand, the **Density determination** method also supports the pycnometer method, which does not rely on **Archimedes' principle**. The method **Density determination** includes three method types:

Solid: Determines the density of a solid with the help of a density kit.

Liquid (sinker): Determines the density of a liquid with the help of a density kit and a sinker.

Liquid (pycnometer): Determines the density of a liquid in a glass vessel, for example, using a pycnometer.

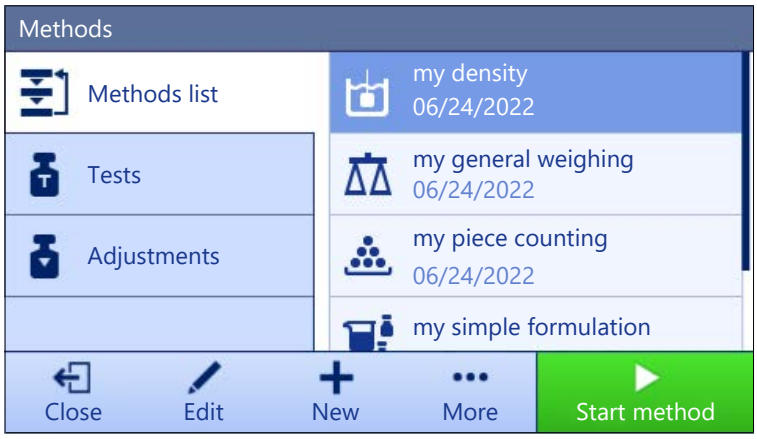

For details about method settings:

See also

Settings: method "Density determination" ▸ Page 118

5.2.6.1 Creating a method "Density determination"

Navigation: Methods > Methods list

1 Tap **+ New** in the action bar.
   ➡ The method wizard opens, starting at **1. Method type**.
2 Tap **Method type** and select the method type **Density determination**.
3 Tap **→ Next**.
   ➡ The method wizard opens the section **2. Identification**.
4 Define the **Method name** and **Result description** and tap **→ Next**.
   ➡ The method wizard opens the section **3. Configuration**.
5 Select the **Determination type** and define the corresponding settings, e.g., **Density unit** and **Weighing settings**.
6 Tap **→ Next**.
   ➡ The method wizard opens the section **4. Weighing item**.
7 Define **Initial values for weighing** and tap **→ Next**.
   ➡ The method wizard opens the section **5. Save**.
8 Tap **✓ Finish** to save the new method.

➡ The method has been created and appears in the list.

Note

The **Determination type** can only be selected as part of a new created method. If another **Determination type** (solid, liquid) is required, a new method must be created.

5.2.6.2 Performing a "Density determination"

This example describes how to determine the density of a solid using a density kit.

- A density kit is available for the balance.

1 Open the **Methods** section.
2 Select a method from the **Methods list** or define a new method.
3 Tap **▶ Start method**.
   ➡ The main weighing screen appears with the selected method.
4 Tap **▶ Start**.

5 Specify the **Temperature** and the **Aux. liquid**.

6 Tap ✓ **OK**.

7 Follow the instructions from the wizard.

Note

For approved balances, if the zeroing fails, use the function **Perform initial zero**, see [Service menu ▸ Page 82].

➡ The **Results list** opens and shows a summary of the weighing results.

8 Tap **Complete** to open the printing options.

➡ The dialog **Complete task** appears.

9 Tap ✓ **Complete**.

➡ The task **Density determination** was successfully completed.

5.2.7 Editing a method

To clone a method proceed as follows:

1 Open the **Methods** section.

2 Select the method that you want to edit.

➡ The line color of the selected method becomes blue.

3 Tap **Edit**.

For details about method settings:

See also

Weighing methods settings ▸ Page 82

5.2.8 Cloning a method

To simplify the process to create a method, an existing method can be cloned one or several times. The cloned method will have the same parameter values as the original one. If multiple weighing items exist in the original method, those will be cloned as well.

1 Open the **Methods** section.

2 Tap the method that you want to clone.

➡ The line color of the selected method becomes blue.

3 Tap ••• **More** and tap **Clone**.

➡ A copy of the selected method appears in the list. The cloned method has the same settings as the original method.

Note

A method can be cloned several times. The name of the cloned method is always based on its original name, to which is appended a number.

5.2.9 Deleting a method

Both factory defined methods and user defined methods can be deleted if they are not needed. For this purpose proceed as follows:

1 Open the **Methods** section.

2 Tap the method that you want to delete.

➡ The line color of the selected method becomes blue.

3 Tap ••• **More**.

4 Tap **Delete**.

➡ The message **Delete method and cancel tasks?** appears on the screen.

5 Tap ✓ **OK** to delete the selected method.

➡ The system returns to the method list. The method has been deleted and does not appear on the list anymore.

Note

There is always a method activated in the background. This method can not be directly deleted. To delete the method, another method must be started instead. Now the method is not activated anymore and can be deleted.

5.2.10 Using methods with multiple weighing items (itemized)

Working with itemized methods can simplify the workflow, especially when several weighings with different predefined target weights have to be carried out one after the other. Information such as a target weight and tolerances can be defined for each weighing item within a single task. This may save time and increase quality of weighing processes consisting of multiple steps.

Before multiple weighing items can be used in the weighing process, they must be defined. The two ways of creating a weighing method that includes several weighing items are:

- Directly define the multiple weighing items during the method creating process.
- Use the **Results list** of a running method to define a new method with multiple weighing items.

The following methods use multiple weighing items:

- **General weighing (itemized)**
- **Simple formulation (itemized)**

5.2.10.1 Creating a new method with multiple weighing items (itemized)

This example describes how to define multiple weighing items for the method **General weighing (itemized)**.

1 Open the **Methods** section.

2 Tap ✚ **New** in the action bar.

3 Tap **Method type** and select **General weighing (itemized)**.

4 Step through the method wizard until step **4. Weighing items**.

➡ The dialog **4. Weighing items** appears.

5 Select a weighing item from the list and define the **Sample ID**, **Unit**, **Target weight**, **-Tolerance**, and **+Tolerance**.

6 Tap → **Next**.

7 Tap ✓ **Finish**.

➡ The method has been created and appears in the list.

5.2.10.2 Creating an itemized method from a completed task

It is possible to create a method with multiple items while performing a method that includes a single item, providing that the method type allows it. This example describes how to create a method **General weighing (itemized)** based on a method **General weighing**.

1 Start a method **General weighing**.

2 Perform three weighings and add the results to the **Results list** by tapping ✚ **Add result**.

➡ The results are saved to the **Results list**.

3 Tap ••• **More**.

4 Tap 🖫 **Save as method (itemized)**.

5 Define a **Method name**.

6 Tap ✓ **OK**.

➡ A method **General weighing (itemized)** including three items is created and added to the **Methods list** with the name defined by the user.

5.2.10.3 Performing an itemized method

After creating a method with multiple items, it can be started.

1 Open the **Methods** section.

2 Select an itemized method from the **Methods list**.

3 Tap ▶ **Start method**.

➡ The main weighing screen opens. The target weight and the tolerance limits defined in the method appear.

5.3 Test weights

5.3.1 Defining an individual test weight

The user should enter data related to each test weight based on the corresponding certificate. This enables each external test weight to be clearly assigned to a specific certificate. Up to 12 external test weights can be configured. These test weights can be used to carry out external tests and adjustments.

Navigation: Methods > Tests > Test weights

Note

An external test weight for an external adjustment has to weigh at least 10% of the balance capacity. External test weights under 10% of the balance capacity are not displayed on the balance.

- The dialog **Test weights** is open.

1 Tap + **Test weight**.

2 Define the test weight settings and confirm with ✓ **Finish**.

➡ The test weight is defined and will be available later in the test procedure.

5.3.2 Defining a combined test weight

The user can combine test weights to achieve a test weight capacity that is not available as a single standard weight. For example, a weight of 10 g and a weight of 20 g can be combined and used as a test weight of 30 g. Each combined test weight can include two or three test weights. The class of a specific combined weight can only be as good as the worst class of the individual test weights it contains. As for any other test weight, combined test weight can be used to carry out external tests and adjustments.

Navigation: Methods > Tests > Test weights

- The dialog **Test weights** is open.
- At least two individual test weights are defined.

1 Tap **Combined weight**.

2 Enter a **Test weight name**.

3 Select the **Minimum weight class** for the combined weight.

4 Tap **Weights**.

➡ The individual weights of at least **Minimum weight class** are shown.

5 Select the weights to include in the combined weight.

6 Tap ✓ **OK**.

➡ The **Nominal weight** is calculated as the sum of the selected individual weights.

7 Tap ✓ **Save**.

➡ The combined test weight is defined and will be available later in the test procedure.

5.4 Tests

Routine tests can be performed to ensure accurate weighing results according to GWP® or other QM systems. Therefore the tests should be performed in fixed, regular intervals depending on your QM system and the results should be documented in a traceable way.

≡ **Navigation: Methods > Tests**

5.4.1 Overview routine tests

METTLER TOLEDO can help you to define the routine tests to be performed based on your process requirements. Please contact your local METTLER TOLEDO representative for additional information.

5.4.1.1 Eccentricity

The purpose of the eccentricity test is to check if every eccentric load deviation (corner load deviation) is within the user SOP tolerances. The corner load is the deviation of the measurement value through off-center (eccentric) loading. The corner load increases with the weight of the load and its distance from the center of the weighing pan support (1). If the display remains consistent, even when the same load is placed on different parts of the weighing pan, the balance does not have corner load deviation.

The result corresponds to the highest of the four determined eccentric load deviations (2 to 5).

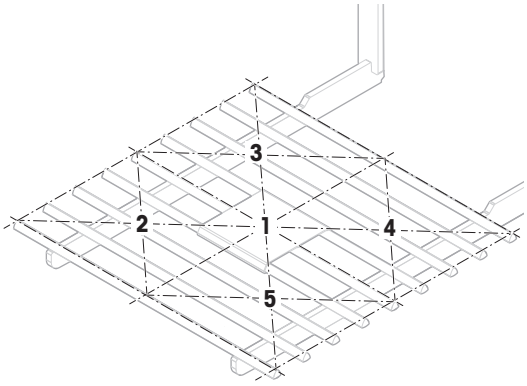

5.4.1.2 Repeatability test

The repeatability test calculates the standard deviation of a series of measurements with a single test weight in order to determine the repeatability of the balance.

Repeatability is a measure of the ability of a balance to supply the same result in repetitive weighings with one and the same load under the same measurement conditions. During the test, a load is placed and measured at the same location on the weighing pan several times. Afterwards, the difference between the measured weight values is calculated. The spread of the measured results leads to the repeatability.

Repeatability is highly affected by the ambient conditions (drafts, temperature fluctuations and vibrations) and also by the skill of the person performing the weighing. Therefore, the series of measurements must be carried out by the same operator, in the same location, under constant ambient conditions and without interruption.

The following test types are available:

- **Repeatab. - 1 TP**: To test the repeatability of the balance at one test point, without tare weight.
- **Repeatab. - Tare - 1 TP**: To test the repeatability of the balance at one test point, with a tare weight.

5.4.1.3 Sensitivity test

The sensitivity of the balance defines the deviation between the balance reading and the actual load. The sensitivity test allows you to measure the sensitivity using one or two test points.

The following test types are available:

- **Sensitivity - 1 TP**: To test the sensitivity of the balance at one test point, without tare weight.
- **Sensitivity - 2 TP**: To test the sensitivity of the balance at two test points, without tare weight.
- **Sensitivity - Tare - 1 TP**: To test the sensitivity of the balance at one test point, with a tare weight.
- **Sensitivity - Tare - 2 TP**: To test the sensitivity of the balance at two test points, with a tare weight.

5.4.2 Creating a new test

Before a test can be performed, the test settings have to be defined. A test wizard is leading you step-by-step through the process.

1 Open the **Methods** section.

2 Tap **Tests**.

3 Tap **+ New**.

➡ The wizard **Create new test** starts.

4 Select the test type.

5 Work through the process by using the button → **Next** to go to the next step or the button ← **Back** to go back to the previous step.

For details about test settings:

See also

Tests settings ▸ Page 125

5.4.3 Performing a test

NOTICE

Incorrect weighing results due to wrong handling of the test weights.

– Only handle test weights with gloves, tweezers, weight forks, or weight handles.

You can perform an eccentricity test, a repeatability test or a sensitivity test. Which test you have to perform and when depends on the respective weighing processes. Mettler-Toledo GmbH can help you to define the routine tests to be performed based on your process requirements. Please contact your local METTLER TOLEDO representative for additional information.

Moments when tests could be performed:

- After cleaning
- After a software update
- Daily before putting into operation
- Depending on own SOP

Requirements:

- At least one test weight is defined.
- At least one sensitivity, one repeatability or one eccentricity test is created.

All of the following pictured test weights or vessels are examples. Actual test weights or vessels may look different.

See also

Defining an individual test weight ▸ Page 43
Defining a combined test weight ▸ Page 43
Tests settings ▸ Page 125

5.4.3.1 Performing an "Eccentricity"

1 Open the **Methods** section.

2 Tap **Tests**.

➡ The test(s) previously defined appear on the list.

3 Select the eccentricity test you wish to perform and tap ▶ **Start**.

➡ The test sequence starts.

4 Ensure that the weighing pan is empty and clean. Have at hand: the test weight, gloves, and the appropriate tools to handle the test weight.

5 When all requirements are fulfilled tap ✓ **OK**.

6 Make sure that the weighing pan is empty and tap ✓**OK**.

➡ The door closes automatically (depending on the door settings) and the balance starts an automatic zeroing.

7 Choose an available test weight
- or -
add a new test weight and tap ✓**OK**.

8 Open the door and place the test weight (1) carefully in position 1, in the middle of the weighing pan (2).
   - ➡ The measurement starts with **Capturing weight...**.
   - ➡ The door closes automatically (depending on the door settings).
   - ➡ When the measurement is finished, the door opens automatically (depending on the door settings).
   - ➡ The result of the first measurement is added to the **Results list** as **Position 1**.

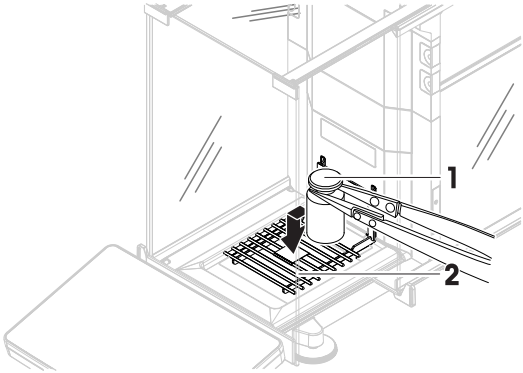

9 Lift the test weight and move to position 2 (front left corner of the weighing pan).
   - ➡ The measurement starts with **Capturing weight...**.
   - ➡ The door closes automatically (depending on the door settings).
   - ➡ When the measurement is finished, the door opens automatically (depending on the door settings).
   - ➡ The result of the second measurement is added to the **Results list** as **Position 2**.

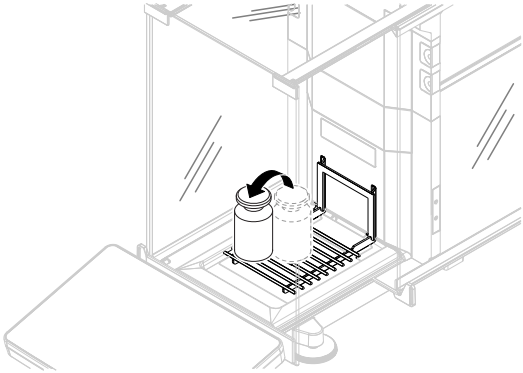

10 Lift the test weight and move to position 3 (back left corner of the weighing pan).
   - ➡ The measurement starts with **Capturing weight...**.
   - ➡ The door closes automatically (depending on the door settings).
   - ➡ When the measurement is finished, the door opens automatically (depending on the door settings).
   - ➡ The result of the third measurement is added to the **Results list** as **Position 3**.

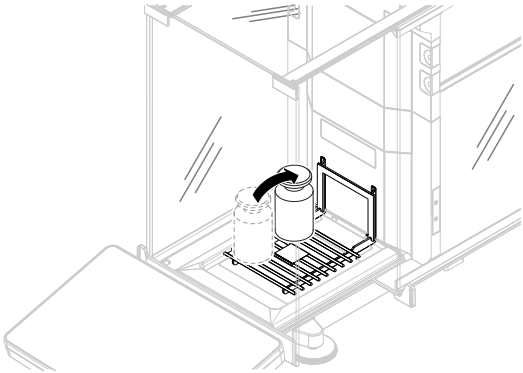

11 Lift the test weight and move to position 4 (back right corner of the weighing pan).
   - ➡ The measurement starts with **Capturing weight...**.
   - ➡ The door closes automatically (depending on the door settings).
   - ➡ When the measurement is finished, the door opens automatically (depending on the door settings).
   - ➡ The result of the fourth measurement is added to the **Results list** as **Position 4**.

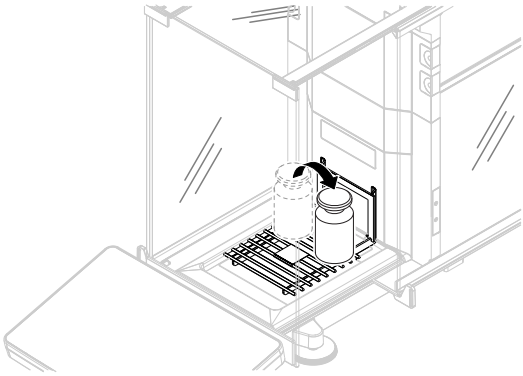

12 Lift the test weight and move to position 5 (front right corner of the weighing pan).
   - ➡ The measurement starts with **Capturing weight...**.
   - ➡ The door closes automatically (depending on the door settings).
   - ➡ When the measurement is finished, the door opens automatically (depending on the door settings).
   - ➡ The result of the fifth measurement is added to the **Results list** as **Position 5**.
   - ➡ The eccentricity test is finished.

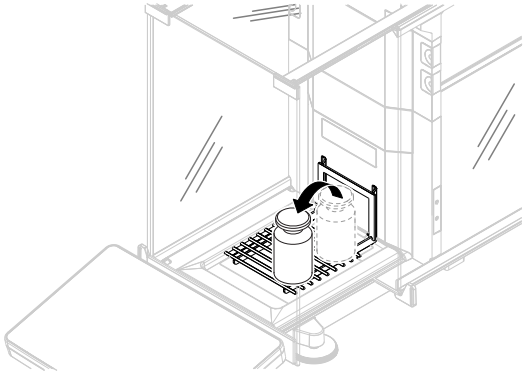

13 Remove the test weight carefully and tap ✓ **OK**.
   - ➡ The door closes automatically (depending on the door settings) and the balance starts an automatic zeroing.
14 When the test procedure is finished, tap **Finish**.
   - ➡ The result dialog opens.
15 To print the results tap **Print**, to finish the test tap ✓ **Finish**.

Test result

If the test failed, see "Troubleshooting", search the error, remedy it and test again. If the test fails again, contact a METTLER TOLEDO representative.

See also

Troubleshooting ▸ Page 143

5.4.3.2 Performing a "Repeatability test"

In this section, all repeatability tests are described. Which test you use depends on the respective test target.

Repeatability - 1 test point

1 Open the **Methods** section.
2 Tap **Tests**.
   - ➡ The test(s) previously defined appear on the list.
3 Select the repeatability test you wish to perform and tap ▶ **Start**.
   - ➡ The test sequence starts.
4 Ensure that the weighing pan is empty and clean. Have at hand: the test weight, gloves, and the appropriate tools to handle the test weight.
5 When all requirements are fulfilled tap ✓ **OK**.
6 Make sure that the weighing pan is empty and tap ✓**OK**.
   - ➡ The door closes automatically (depending on the door settings) and the balance starts an automatic zeroing.
7 Choose an available test weight
   - or -
   add a new test weight and tap ✓**OK**.

8 Open the door and place the test weight (1) carefully on the weighing pan (2).

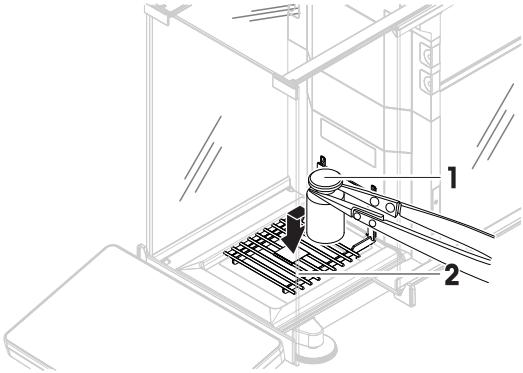

- ➡ The measurement starts with **Capturing weight...**.
- ➡ The door closes automatically (depending on the door settings).
- ➡ When the measurement is finished, the door opens automatically (depending on the door settings).
- ➡ The result of the measurement is added to the **Results list**.

9 Remove the test weight carefully and tap ✓ **OK**.

- ➡ The door closes automatically (depending on the door settings) and the balance starts an automatic zeroing.
- ➡ Depending on the specified **Number of repetitions** you have to repeat the last two steps a certain number of times.

10 When the test procedure is finished, tap **Finish**.

- ➡ The result dialog opens.

11 To print the results tap **Print**, to finish the test tap ✓ **Finish**.

Repeatability - Tare - 1 test point

1 Open the **Methods** section.

2 Tap **Tests**.

- ➡ The test(s) previously defined appear on the list.

3 Select the repeatability test you wish to perform and tap ▶ **Start**.

- ➡ The test sequence starts.

4 Ensure that the weighing pan is empty and clean. Have at hand: the test weight, gloves, and the appropriate tools to handle the test weight.

5 When all requirements are fulfilled tap ✓ **OK**.

6 Make sure that the weighing pan is empty and tap ✓**OK**.

- ➡ The door closes automatically (depending on the door settings) and the balance starts an automatic zeroing.

7 Choose an available test weight/test container
- or -
add a new test weight/test container.

8 Place the test weight/test container (1) in the center of the weighing pan (2) and tap ✓ **OK**.

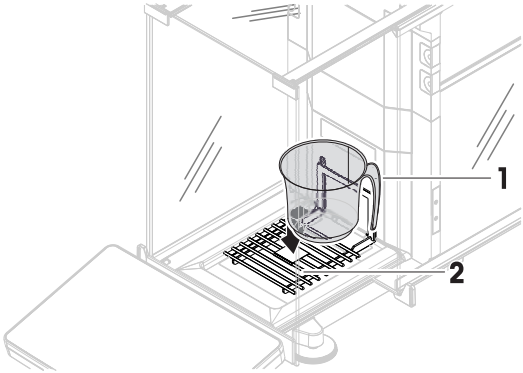

- ➡ The door closes automatically (depending on the door settings) and the measurement starts with **Taring...**.
- ➡ When the tare is finished, the door opens automatically (depending on the door settings).
- ➡ The tare result is added to the **Results list**.

9 Carefully place the test weight (3) onto the weighing pan or into the tare container (4).
   - ➡ The measurement starts with **Capturing weight...**.
   - ➡ The door closes automatically (depending on the door settings).
   - ➡ When the measurement is finished, the door opens automatically (depending on the door settings).
   - ➡ The result of the measurement is added to the **Results list**.

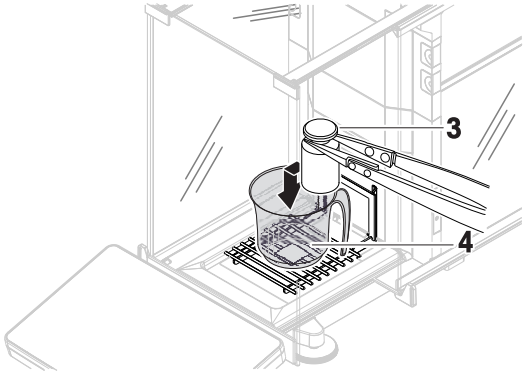

10 Remove the test weight, leave the container on the weighing pan.
   - ➡ The door closes automatically (depending on the door settings) and the measurement starts with **Taring...**.
   - ➡ When the tare is finished, the door opens automatically (depending on the door settings).
   - ➡ The tare result is added to the **Results list**.

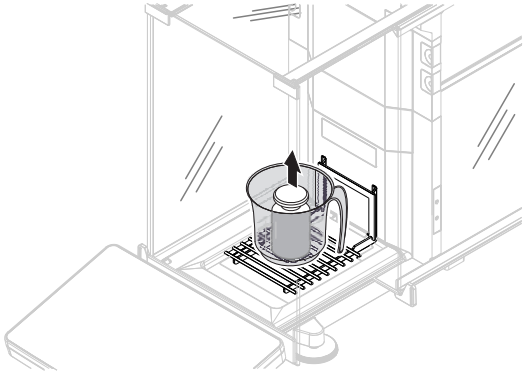

11 Carefully place the test weight (3) onto the weighing pan or into the tare container (4).
   - ➡ The measurement starts with **Capturing weight...**.
   - ➡ The door closes automatically (depending on the door settings).
   - ➡ When the measurement is finished, the door opens automatically (depending on the door settings).
   - ➡ The result of the measurement is added to the **Results list**.
   - ➡ Depending on the specified **Number of repetitions** you have to repeat the last two steps a certain number of times.
12 When the test procedure is finished, tap **Finish**.
   - ➡ The result dialog opens.
13 To print the results tap **Print**, to finish the test tap ✓ **Finish**.

Test result

If the test failed, see "Troubleshooting", search the error, remedy it and test again. If the test fails again, contact a METTLER TOLEDO representative.

See also

Troubleshooting ▸ Page 143

5.4.3.3 Performing a "Sensitivity test"

In this section, two of four possible sensitivity tests are described. Which test you use depends on the respective test target. The procedure for the tests with two test points is similar, but additional test weights and test containers are necessary.

Sensitivity - 1 test point

1 Open the **Methods** section.
2 Tap **Tests**.
   - ➡ The test(s) previously defined appear on the list.
3 Select the sensitivity test you wish to perform and tap ▶ **Start**.
   - ➡ The test sequence starts.

4 Ensure that the weighing pan is empty and clean. Have at hand: the test weight, gloves, and the appropriate tools to handle the test weight.

5 When all requirements are fulfilled tap ✓ **OK**.

6 Make sure that the weighing pan is empty and tap ✓**OK**.

➡ The door closes automatically (depending on the door settings) and the balance starts an automatic zeroing.

7 Choose an available test weight
- or -
add a new test weight and tap ✓**OK**.

8 Open the door and place the test weight (1) carefully on the weighing pan (2).

➡ The measurement starts with **Capturing weight...**.

➡ The door closes automatically (depending on the door settings).

➡ When the measurement is finished, the door opens automatically (depending on the door settings).

➡ The result of the measurement is added to the **Results list**.

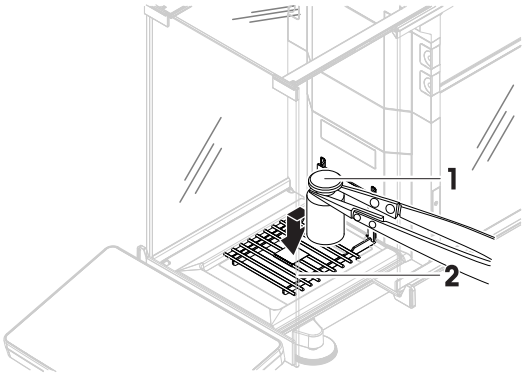

9 When the test procedure is finished, tap **Finish**.

➡ The result dialog opens.

10 To print the results tap **Print**, to finish the test tap ✓ **Finish**.

Sensitivity - Tare - 1 test point

1 Open the **Methods** section.

2 Tap **Tests**.

➡ The test(s) previously defined appear on the list.

3 Select the sensitivity test you wish to perform and tap ▶ **Start**.

➡ The test sequence starts.

4 Ensure that the weighing pan is empty and clean. Have at hand: the test weight, gloves, and the appropriate tools to handle the test weight.

5 When all requirements are fulfilled tap ✓ **OK**.

6 Make sure that the weighing pan is empty and tap ✓**OK**.

➡ The door closes automatically (depending on the door settings) and the balance starts an automatic zeroing.

7 Choose an available test weight/test container
- or -
add a new test weight/test container.

8 Place the test weight/test container (1) in the center of the weighing pan (2) and tap ✓ **OK**.

➡ The door closes automatically (depending on the door settings) and the measurement starts with **Taring...**.

➡ When the tare is finished, the door opens automatically (depending on the door settings).

➡ The tare result is added to the **Results list**.

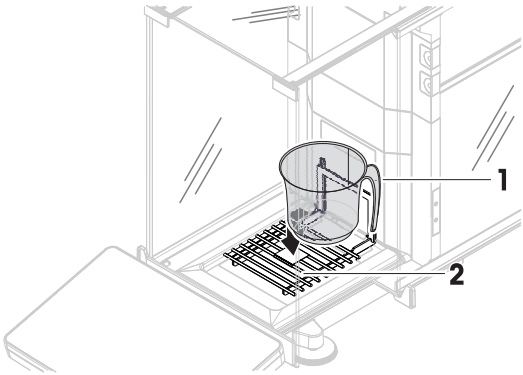

9 Carefully place the test weight (3) onto the weighing pan or into the tare container (4).
   - ➡ The measurement starts with **Capturing weight...**.
   - ➡ The door closes automatically (depending on the door settings).
   - ➡ When the measurement is finished, the door opens automatically (depending on the door settings).
   - ➡ The result of the measurement is added to the **Results list**.

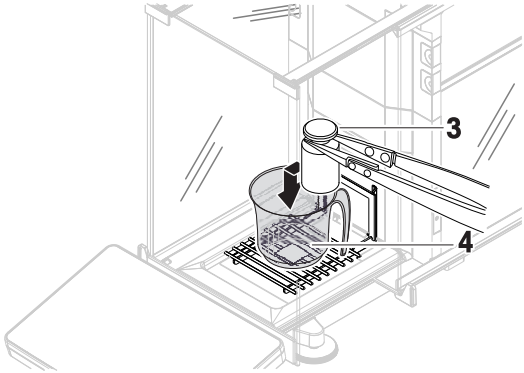

10 When the test procedure is finished, tap **Finish**.
   - ➡ The result dialog opens.

11 To print the results tap **Print**, to finish the test tap ✓ **Finish**.

Test result

If the test failed, see "Troubleshooting", search the error, remedy it and test again. If the test fails again, contact a METTLER TOLEDO representative.

See also

Troubleshooting ▸ Page 143

5.4.4 Editing a test

Navigation: Methods > Tests

1 Select the test to be edited from the list and tap **Edit**.
   - ➡ The test settings open.

2 Edit the test settings.

See also

Tests settings ▸ Page 125

5.4.5 Printing test results

You can print a test manually, whether the parameter **Automatic print** in the test settings is activated or deactivated. For this purpose proceed as follows:

1 Open the **Methods** section.

2 Tap **Tests**.
   - ➡ The test list opens.

3 Select the test to print and tap ••• **More** and tap **Print all**

➡ The test is printed.

5.4.6 Deleting a test

Running tests are labeled with the symbol ◐ and cannot be deleted. To delete a test, it must be finished or another test must be activated. To delete a test, proceed as follows:

1 Open the **Methods** section.

2 Tap **Tests**.
   - ➡ The test list opens.

3 Select the test to delete.

4 Tap ••• **More** and tap **Delete**.
   - ➡ The section **Delete routine test** opens. The message **Do you really want to delete the selected routine test?** appears.

5 Tap ✓ **Yes** to delete the test. Tap ✕ **No** to cancel the deleting process.

➡ After deleting the test, the system returns to the test list. The test has been deleted and does not appear on the list anymore.

5.4.7 Consulting the test history

≡ **Navigation: ⚙ Balance menu > History > Tests**

– Select a test.

➡ The test history opens. Specific data are displayed for each test, such as the date and time, type of test, temperature, level state, test weight ID, and weight deviation.

See also

History ▸ Page 70

5.5 Adjustments

This section describes how internal and external adjustments can be defined and performed. Which type of adjustment is performed depends on the defined adjustment **Strategy**.

≡ **Navigation: Methods > Adjustments**

5.5.1 Internal adjustment

5.5.1.1 Editing an "Internal adjustment"

1 Open the **Methods** section.

2 Tap **Adjustments**.

3 Tap **Edit**.

4 Set the **Strategy** to **Internal adjustment**.

5 Define the adjustment parameters.

6 Tap ✓ **Save**.

➡ Your internal adjustment has been edited.

For details about adjustment settings:

See also

Adjustments settings ▸ Page 135

5.5.1.2 Performing an "Internal adjustment"

■ The adjustment **Strategy** is set to **Internal adjustment**.

1 Open the **Methods** section, tap **Adjustments**, select the adjustment, and tap ▶ **Start**
- or -
from the main weighing screen, tap ••• **More** and tap **Start adjustment**.

➡ **Internal adjustment** is being executed.

➡ When the adjustment has been completed, an overview of the adjustment results appears.

2 Tap **Print** if you want to print the results.

3 Tap ✓ **Finish adjustment**.

➡ The balance is ready.

5.5.2 External adjustment

5.5.2.1 Editing an "External adjustment"

1 Open the **Methods** section.

2 Tap **Adjustments**.
3 Tap **Edit**.
4 Set the **Strategy** to **External adjustment**.
5 Tap **Test weights - Edit test weight**.
   ➡ The dialog **Test weights - Edit test weight** opens.
6 Select a test weight from the list and tap ✓ **OK**
   - or -
   tap + **Test weight** to define a new test weight.
7 Define the test weight settings and confirm with ✓ **OK**.
8 Tap ✓ **Save**.
➡ Your external adjustment has been edited.

For details about adjustment settings:

See also

Adjustments settings ▸ Page 135

5.5.2.2 Performing an "External adjustment"

After the external weights have been defined, the function **External adjustment** can be performed.

- The adjustment **Strategy** is set to **External adjustment**.

1 Open the **Methods** section, tap **Adjustments**, select the adjustment, and tap ▶ **Start**
   - or -
   from the main weighing screen, tap ••• **More** and tap **Start adjustment**.
   ➡ The adjustment process starts.
2 Ensure that the weighing pan is empty and clean. Have at hand: the test weight, gloves, and the appropriate tools to handle the test weight.
3 When all requirements are fulfilled tap ✓ **OK**.
4 Make sure that the weighing pan is empty and tap ✓**OK**.
5 Choose an available test weight
   - or -
   add a new test weight and tap ✓**OK**.
6 Open the door and place the test weight (1) carefully on the weighing pan (2).
   ➡ The door closes and the adjustment starts.
   ➡ After a few seconds the door opens.
7 Remove the test weight from the weighing pan and tap ✓ **OK**.
   ➡ The door closes and opens. The adjustment is finishing and the adjustment results appear.
8 To print the results tap **Print**, to finish the test tap ✓ **Finish**.

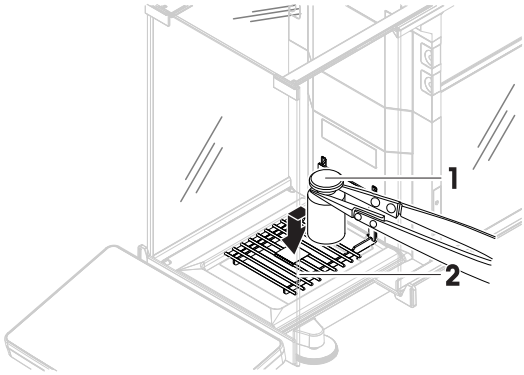

See also

Defining an individual test weight ▸ Page 43
Defining a combined test weight ▸ Page 43

5.5.3 Consulting the adjustment history

Navigation: ⚙ Balance menu > History > Adjustments

– Select an adjustment.

➡ The adjustment history opens. Specific data are displayed for each adjustment such as the date and time, type of adjustment, temperature, level state, adjustment trigger, and correction.

See also

History ▸ Page 70

5.6 Peripheral devices

5.6.1 Printer

Printers can help document your processes and results. Two types of printers can be connected to the balance:

- strip printer: to print on strip paper, for example, for the documentation of weighing result
- label printer: to print on label stickers, for example, for the identification of samples

Each weighing method offers the possibility to trigger the printing process manually on a label or on strip paper when completing a task. The settings of the method can also be edited such that the results are automatically printed when a result is added to the result list or when the task is complete, for example. When using a label printer, the template of the printed label is defined individually for each method.

The following sections show typical use cases of installing and using a printer with the balance. They cover two combinations of settings amongst: manual and automatic printing, strip and label printing, task results and weighing item results printing, as well as USB and Bluetooth connections. Other combinations of settings can be achieved similarly.

NOTICE

Damage to the device due to inappropriate use

– Consult the User Manual of the device before using it.

5.6.1.1 Printing results manually on a strip printer via USB

This example describes how to install a strip printer using a USB cable. For this example, the method does not include automatic printing, but the results are printed manually when the task is completed.

Installing and configuring the printer

■ The printer is connected to the power outlet and switched on.

■ The USB cable is connected to the printer.

■ The main weighing screen is shown on the balance terminal.

1 Connect the USB cable to one of the USB-A ports of the balance.

➡ The balance detects the USB device automatically. The dialog **Add device** appears, informing the user that the system has found a specific device.

2 Set a name for the USB device, then tap → **Next**.

3 Tap ✓ **Finish**.

➡ The USB device is connected and saved to the system.

➡ The settings of the device are displayed.

4 Tap **Printer settings**.

5 Tap **Printer category** and select **Strip printer**.

6 Tap ✓ **Save**.

Note

Some printers can print both on labels or on strip paper. In those cases, the printer type must be specified in the settings of the printer. If the printer can only print on labels or can only print on strip paper, the printer type is set automatically.

Note

A label printer and a strip printer can be connected simultaneously to the balance. However, only one printer of a specific type can be active at any given time. When connecting a new printer of the same type, the printer of the same type that was previously active is deactivated automatically. After connecting a new printer, verify the status of all other printers.

Note

If the USB cable is disconnected and reconnected, the connection will be detected automatically. The printer does not need to be installed again.

Printing a test page

After installing and configuring a printer, a test page can be printed.

Navigation: Balance menu > Settings > Devices / Printers

- A printer is connected to the balance.

1 Navigate to the section **Devices / Printers**.
2 Select the printer in the list of devices.
3 Tap ••• **More** and tap **Print test page**.

Printing the results

Navigation: Methods > Methods list

- A strip printer is connected to the balance.

1 Select a method from the **Methods list**.
2 Tap ▶ **Start method**.
3 Perform the necessary actions to weigh your sample(s).
4 Tap **Complete** to open the export options.
   ➡ The dialog **Complete task** appears.
5 Tap **Print results manually** to print the results on the strip printer.

See also

Devices / Printers ▸ Page 79

5.6.1.2 Printing results automatically on a label printer via Bluetooth

This example describes how to install a label printer using a Bluetooth adapter. For this example, the method is set such that a label is printed automatically every time the user taps **Add result**.

For more information about how to install your Bluetooth adapter, consult the Installation Instructions provided with it.

Installing and configuring the printer

Navigation: ⚙ Balance menu > ⚙ Settings > Interfaces > Bluetooth

Navigation: ⚙ Balance menu > ⚙ Settings > Devices / Printers

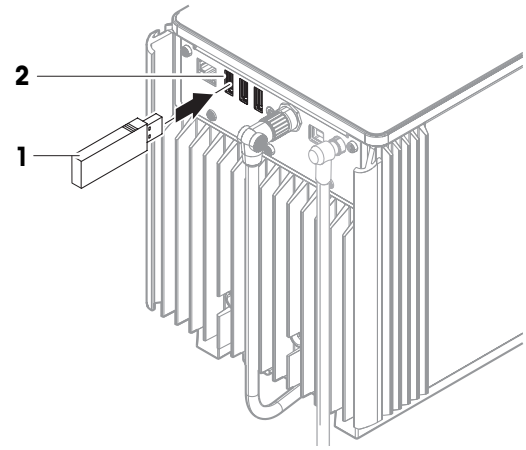

- The printer is connected to the power outlet and switched on.
- A Bluetooth RS adapter (to connect to the printer) and a Bluetooth USB adapter (to connect to the balance) are available.
- The switch on the Bluetooth RS adapter is in the position DCE.
- You have identified the MAC address (unique device address) on the Bluetooth RS adapter.
- The main weighing screen is shown on the balance terminal.

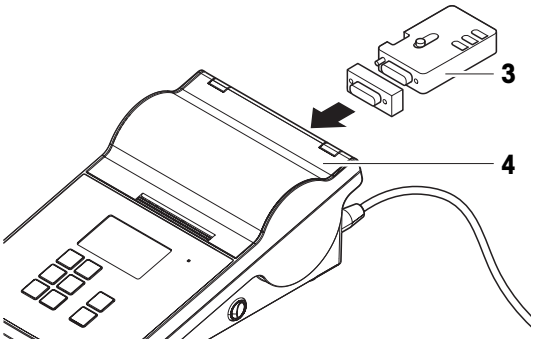

1 Connect the Bluetooth USB adapter (**1**) to one of the USB-A ports (**2**) of the balance.

2 Connect the Bluetooth RS adaptor (**3**) to the printer (**4**).
   ➡ The lights on the Bluetooth RS adaptor start blinking.

3 Navigate to the section **Bluetooth**.

4 Set **Activation** to **Active**.

5 Tap ✓ **Save**.

6 Navigate to the section **Devices / Printers**.

7 Tap ➕ **Add device**.
   ➡ The dialog **Add device** opens.

8 Select **Bluetooth connection** and tap ➔ **Next**.
   ➡ The message **Searching for devices...** appears.
   ➡ The MAC addresses of all the available Bluetooth devices appear.

9 Select the MAC address of the Bluetooth RS adapter from the list and tap ➔ **Next**.

10 Check that the **PIN Code** is correct: `Mettler-Toledo`.

11 Tap ➔ **Next** to confirm the Bluetooth connection.
   ➡ The balance is pairing the Bluetooth USB adapter from the balance with the Bluetooth RS adapter from the printer.
   ➡ The system informs the user that it has found the device.

12 Set a name for the USB device, then tap ➔ **Next**.

13 Tap ✓ **Finish**.
   ➡ The USB device is connected and saved to the system.
   ➡ The settings of the device are displayed.

14 Tap **Printer settings**.

15 Tap **Printer category** and select **Label printer**.

16 Tap ✓ **Save**.

Note

When setting up the Bluetooth connection, the balance pairs with the Bluetooth RS adaptor, not with the printer that is attached to it. When the user connects the same Bluetooth RS adaptor to another printer, the user must remove the configured printer from the list of devices and add the new printer.

Note

Some printers can print both on labels or on strip paper. In those cases, the printer type must be specified in the settings of the printer. If the printer can only print on labels or can only print on strip paper, the printer type is set automatically.

Note

A label printer and a strip printer can be connected simultaneously to the balance. However, only one printer of a specific type can be active at any given time. When connecting a new printer of the same type, the printer of the same type that was previously active is deactivated automatically. After connecting a new printer, verify the status of all other printers.

Note

If the USB adapter is removed from the balance and plugged in again, the Bluetooth connection will be detected automatically. This may take up to 30 seconds.

Printing a test page

After installing and configuring a printer, a test page can be printed.

Navigation: Balance menu > Settings > Devices / Printers

- A printer is connected to the balance.

1 Navigate to the section **Devices / Printers**.
2 Select the printer in the list of devices.
3 Tap ••• **More** and tap **Print test page**.

Editing the method settings

Navigation: Methods > Methods list

1 Select a method from the **Methods list**.
2 Tap **Edit**.
3 Tap **Print / Export**.
4 Tap **Label printout for weighing item**.
5 Set **Automatic label printout for weighing item** to **Active**.
6 Select the desired template from the list: **Used template**.
7 Tap **Field settings**.
8 Customize the content of each field.
9 Tap ✓ **OK**.
10 Tap ✓ **Save**.

Printing the results

Navigation: Methods > Methods list

- A label printer is connected to the balance.
- A method exists with the desired template for the printed label.

1 Select the method from the **Methods list**.
2 Tap ▶ **Start method**.
3 Perform the necessary actions to weigh your sample.
4 Tap + **Add result**.
   ➡ The label for this weighing item is automatically printed on the label printer.

See also

Bluetooth ▸ Page 79
Devices / Printers ▸ Page 79

5.6.2 Barcode reader

The barcode reader can be used to enter text or numbers in any input field on the terminal. The format of the field must be compatible with the scanned barcode. Depending on the settings of the weighing method, the characters of the barcode can be added to the active field or to a specific field of the method. The latter is depicted by the following example.

NOTICE

Damage to the device due to inappropriate use

– Consult the User Manual of the device before using it.

5.6.2.1 Scan a sample ID using a barcode reader

This example shows how the barcode reader can be used to specify the ID of a sample in a method of type **General weighing**. A similar procedure can be applied to other method types and/or other input fields.

Installing and configuring the barcode reader

- A barcode reader is available.
- The main weighing screen is shown on the balance terminal.

1 Connect the USB cable to one of the USB-A ports of the balance.
   ➡ The balance detects the USB device automatically. The dialog **Add device** appears and a barcode is displayed.
2 Use the barcode reader to scan the barcode on the display.
3 Tap → **Next**.
4 Set a name for the USB device, then tap → **Next**.
5 Tap ✓ **Finish**.
   ➡ The USB device is connected and saved to the system.
   ➡ The settings of the device are displayed.
6 Tap ✓ **Save**.
   ➡ The barcode reader is ready to use.

Editing the method settings

≡ **Navigation: Methods > Methods list**

- A method **General weighing** exists.
- The method contains one **Result ID** for which **Result description** is set to **Sample ID**.

1 Select the method from the **Methods list**.
2 Tap **Edit**.
3 Tap **Automation**.
4 Tap **Barcode data target** and select the **Result ID** corresponding to **Sample ID**, for example, **Result ID 1**.
5 Tap ✓ **Save**.

Running the method

≡ **Navigation: Methods > Methods list**

- The barcode reader is connected to the balance.
- You have a sample identified with a barcode.

1 Select the method from the **Methods list**.
2 Tap ▶ **Start method**.
3 Use the barcode reader to scan the barcode that identifies your sample.
   ➡ The text associated to the barcode appears in the field of **Sample ID**.

4 Perform the necessary actions to weigh your sample.
5 Tap ➕ **Add result**.

See also

Devices / Printers ▸ Page 79

5.6.3 Foot switch and ErgoSens

The foot switch and the ErgoSens are optional accessories that allow you to perform operations on your balance without having to use the terminal. The following sections show examples of operations that can be performed with a foot switch or an ErgoSens.

NOTICE

Damage to the device due to inappropriate use

– Consult the User Manual of the device before using it.

5.6.3.1 Opening the draft shield with a foot switch

This example explains how to install a USB foot switch and use it to open and close the draft shield.

Installing and configuring the foot switch

- A foot switch is available.
- The main weighing screen is shown on the balance terminal.

1 Connect the USB cable to one of the USB-A ports of the balance.
   ➡ The balance detects the USB device automatically. The dialog **Add device** appears, informing the user that the system has found a specific device.
2 Set a name for the USB device, then tap ➔ **Next**.
3 Tap ✓ **Finish**.
   ➡ The USB device is connected and saved to the system.
   ➡ The settings of the device are displayed.
4 Tap **Function** and select **Door**.
5 Tap ✓ **Save**.
   ➡ The foot switch is configured to control the balance door(s).

Configuring the balance door(s)

The foot switch can be set to open a single door or several doors of the balance simultaneously, if applicable.

≡ **Navigation: ⚙ Balance menu > ⚙ Settings > Balance > Doors**

1 Navigate to the section **Doors**.
2 For each door that you want to be controlled by the device, select the door and set **Devices** to **Active**.
3 Tap ✓ **Save**.
   ➡ The foot switch controls the selected door(s) of the balance.

See also

Devices / Printers ▸ Page 79
Doors ▸ Page 76

5.6.3.2 Taring the balance with an ErgoSens

This example explains how to install a USB ErgoSens and configure it to tare the balance.

Installing and configuring the ErgoSens

- An ErgoSens is available.
- The main weighing screen is shown on the balance terminal.

1 Connect the USB cable to one of the USB-A ports of the balance.
   ➡ The balance detects the USB device automatically. The dialog **Add device** appears, informing the user that the system has found a specific device.
2 Set a name for the USB device, then tap → **Next**.
3 Tap ✓ **Finish**.
   ➡ The USB device is connected and saved to the system.
   ➡ The settings of the device are displayed.
4 Tap **Function** and select **Tare**.
5 Tap ✓ **Save**.
   ➡ The ErgoSens is ready to use to tare the balance.

See also

Devices / Printers ▸ Page 79

5.6.4 Editing the settings of a device

≡ **Navigation: ⚙ Balance menu > ⚙ Settings > Devices / Printers**

1 Navigate to the section **Devices / Printers**.
   ➡ A list of devices appears, showing the connection status and the connection type of each device.
2 Select the device from the list of devices and printers.
   ➡ The details of the device are shown.
3 To change the name of the device, tap **Name**, enter the name and tap ✓.
4 Some devices have additional editable settings. Tap on those settings to edit them.
5 Save the settings.

5.6.5 Deleting a device

≡ **Navigation: ⚙ Balance menu > ⚙ Settings > Devices / Printers**

1 Navigate to the section **Devices / Printers**.
   ➡ A list of devices appears, showing the connection status and the connection type of each device.
2 Select the device from the list of devices and printers.
3 Tap ••• **More** and tap 🗑 **Delete device**.
   ➡ A message appears, asking you to confirm that you want to delete the device.
4 To delete, tap ✓ **OK**. To cancel the delete dialog, tap ✕ **Cancel**.

➡ The device is deleted.

5.7 Remote control via services

5.7.1 LabX service

To enable communication between LabX and instruments, the appropriate settings on the instruments must correspond with the settings in LabX. LabX synchronizes the date and time on the instruments with the LabX Server each time a connection is made and each time a task is started. When an instrument is connected, the user interface language on the connected instrument is changed to the language currently installed on the LabX installation.

To install LabX on your computer and for more information about LabX, consult the LabX Reference Manual (RM).

Note

Once the connection between LabX and the balance is established, the balance terminal is controlled by LabX. It is always possible to switch to manual mode directly on the terminal.

See also

LabX / Services ▸ Page 80

5.7.1.1 Using LabX via a USB connection

To establish this connection, the USB driver must be installed on your computer. The driver is available online:

▸ www.mt.com/labweighing-software-download

Connecting the balance to the computer

- A USB-A to USB-B cable is available.

1. Connect the USB cable to the USB-B port of the balance.
2. Connect the USB cable to a USB-A port on the computer.

Configuring the service on the balance

Navigation: Balance menu > Settings > LabX / Services

1. Navigate to the section **LabX / Services**.
2. Set **LabX service** to **USB**.
3. Tap ✓ **Save**.

5.7.1.2 Using LabX via an Ethernet connection

Connecting the balance to the network

Navigation: Balance menu > Settings > Interfaces

- An Ethernet cable is available.

1. Connect the Ethernet cable to the Ethernet port of the balance.
2. Connect the other end of the Ethernet cable to your local network.
3. Navigate to the section **Interfaces**.
4. Tap **Ethernet**.
5. Keep the settings of the Ethernet connection at hand. This information might be required to set up the connection at a later stage.
6. Tap ✓ **Save**.

Configuring the service on the balance

≡ **Navigation: ⚙ Balance menu > ⚙ Settings > LabX / Services**

- The balance is connected to the network via Ethernet.

1 Navigate to the section **LabX / Services**.
2 Set **LabX service** to **Network**.
3 Note the port number. This information might be required to set up the connection at a later stage.
4 Tap ✓ **Save**.

5.7.2 MT-SICS service

All XPR and XSR balances can be integrated to a network and can be configured to communicate with a computer using MT-SICS (METTLER TOLEDO Standard Interface Command Set). The available commands depend on the functionality of the balance.

For further information, please contact your METTLER TOLEDO representative.

The full documentation related to MT-SICS for XPR and XSR balances is available online.

▶ www.mt.com/labweighing-software-download

See also

🔗 LabX / Services ▶ Page 80

5.7.2.1 Using MT-SICS via a USB connection

This example describes how to establish a direct USB connection between your balance and a computer. The computer can then be used to control the balance and receive data using the commands of MT-SICS.

To establish this connection, the USB driver must be installed on your computer. The driver is available online:

▶ www.mt.com/labweighing-software-download

Connecting the balance to the computer

- A USB-A to USB-B cable is available.

1 Connect the USB cable to the USB-B port of the balance.
2 Connect the USB cable to a USB-A port on the computer.

Configuring the service on the balance

≡ **Navigation: ⚙ Balance menu > ⚙ Settings > LabX / Services**

1 Navigate to the section **LabX / Services**.
2 Set **MT-SICS** to **USB**.
3 Tap ✓ **Save**.

Configuring the computer

- The USB driver is installed on the computer.
- A terminal program is installed and running on the computer.

1 Provide the necessary connection settings to the terminal program.
2 Test the connection by sending a command to the balance, for example, s to retrieve the stable weight from the balance.
   ➡ If a string is received by the terminal program with the weight, date, and time, the connection has been successfully established.
   ➡ If no response is received by the terminal program, check the connection settings.

5.7.2.2 Using MT-SICS via an Ethernet connection

This example describes how to establish a connection between a balance and a computer through a local network. The computer can then be used to controlled the balance and receive data using the commands of MT-SICS.

Connecting the balance to the network

≡ **Navigation: ⚙ Balance menu > ⚙ Settings > Interfaces**

- An Ethernet cable is available.

1 Connect the Ethernet cable to the Ethernet port of the balance.
2 Connect the other end of the Ethernet cable to your local network.
3 Navigate to the section **Interfaces**.
4 Tap **Ethernet**.
5 Keep the settings of the Ethernet connection at hand. This information might be required to set up the connection at a later stage.
6 Tap ✓ **Save**.

Configuring the service on the balance

≡ **Navigation: ⚙ Balance menu > ⚙ Settings > LabX / Services**

- The balance is connected to the network via Ethernet.

1 Navigate to the section **LabX / Services**.
2 Set **MT-SICS** to **Network**.
   ➡ The port number appears in the list of settings.
3 Note the port number. This information might be required to set up the connection at a later stage.
4 Tap ✓ **Save**.

Configuring the computer

- A terminal program is installed and running on the computer.

1 Provide the necessary connection settings to the terminal program.
   ➡ The computer is connected to the same network and the same subnet as the balance.
2 Test the connection by sending a command to the balance, for example, S to retrieve the stable weight from the balance.
   ➡ If a string is received by the terminal program with the weight, date, and time, the connection has been successfully established.
   ➡ If no response is received by the terminal program, check the connection settings.

ⓘ **Note**

For more information, contact your network administrator.

5.7.3 Web service

The web service allows users to send commands to control and transfer data from the balance using a web browser.

Connecting the balance to the network

≡ **Navigation: ⚙ Balance menu > ⚙ Settings > Interfaces**

- An Ethernet cable is available.

1 Connect the Ethernet cable to the Ethernet port of the balance.
2 Connect the other end of the Ethernet cable to your local network.
3 Navigate to the section **Interfaces**.
4 Tap **Ethernet**.
5 Keep the settings of the Ethernet connection at hand. This information might be required to set up the connection at a later stage.
6 Tap ✓ **Save**.

Configuring the service on the balance

Navigation: Balance menu > Settings > LabX / Services

- The balance is connected to the network via Ethernet.
- The computer and the balance are connected to the same network.
- A web browser is available on the balance.

1 Navigate to the section **LabX / Services**.
2 Activate and configure the service.
3 Tap ✓ **Save**.

The documentation of web service and related examples are available online.

www.mt.com/labweighing-software-download

Note

For more information, contact your network administrator.

Exporting the WSDL definition file

The WSDL (Web Services Description Language) file describes the functionalities of the web service. The WSDL file can be exported as follows.

Navigation: Balance menu > Settings > Balance > General

1 Navigate to **General**.
2 Tap ••• **More**.
3 Tap **Export web service WSDL file**
   ➡ A list of available target locations is shown, including the file server and any USB storage device connected to the balance.
4 Select the target device on which you want to store the data.
5 Tap → **Next**.
   ➡ If the export was successful, the display shows ✔ with the name of the file and the target folder.

See also

LabX / Services ▸ Page 80

5.8 Data management

5.8.1 Exporting results

This example describes how to export results to a USB storage device at the end of a task.

Exporting weighing results

Navigation: Methods > Methods list

- A USB storage device is connected to the balance.

1 Select a method from the **Methods list**.
2 Tap ▶ **Start method**.
3 Perform the necessary actions to weigh your sample(s).
4 Tap **Complete** to open the export options.
   ➡ The dialog **Complete task** appears.
5 Tap **Export results manually** to export the results.
   ➡ A list of available USB storage devices is shown.
6 Select the target USB storage device to store the data.

7 Tap → **Next**.

➡ The results are exported to the USB storage device.

8 Tap ✓ **Complete**.

➡ After completing the task, the results are deleted from the **Results list**.

Exporting the XSD file

Weighing results are exported in XML files. The description of the elements of the XML file is provided in an XSD (XML Schema Definition) file. The XSD file can be exported as follows.

Note

If the XSD file is used for validation, the version contained in the XML file must match the version of the XSD schema.

Navigation: Balance menu > Settings > Balance > General

1 Navigate to **General**.

2 Tap ••• **More**.

3 Tap **Export results XSD files**.

➡ A list of available target locations is shown, including the file server and any USB storage device connected to the balance.

4 Select the target device on which you want to store the data.

5 Tap → **Next**.

➡ If the export was successful, the display shows ✓ with the name of the target folder.

5.8.2 Sending individual results to a computer

The balance offers the possibility to send weighing results to a computer via a USB connection. This feature can be used, for example, to send results to an Excel sheet, to a text file, or to MT-SICS. When used in mode **HID** (Human Interaction Device), the result is sent to the computer where the cursor is located, exactly as if it were a keyboard input (also referred to as "drop to cursor").

This example describes how to send weighing results from a method of type **General weighing** directly into an Excel file on a computer using the functionality **HID**.

Connecting the balance to the computer

- A USB-A to USB-B cable is available.

1 Connect the USB cable to the USB-B port of the balance.

2 Connect the USB cable to a USB-A port on the computer.

Configuring the balance

Navigation: Balance menu > Settings > Balance > Weighing / Quality

1 Navigate to the section **Weighing / Quality**.

2 Tap **Automatic weight value output**.

3 Tap **Output mode** and select **Results**.

4 Tap **Target** and select **HID**.

5 Review the rest of the settings in the section **Automatic weight value output** to customize the output, for example, to add the date and time to each weighing result.

Note

The right settings are highly dependent on your application. For example, when using an Excel sheet as the target, values separated with the character **TAB** will be placed in separate cells.

Editing the method settings

Navigation: Methods > Methods list

- A method **General weighing** exists.

1 Select the method from the **Methods list**.

2 Tap ✎ **Edit**.
3 Tap **Print / Export**.
4 Tap **Strip printout and data export**.
5 Set **Weight value** to **Active**.
6 Tap ✓ **OK**.
7 Tap ✓ **Save**.
   ➡ The method is set up to send the results to the computer when tapping **Add result**.

Running the method

- The USB driver is installed on the computer.

1 Select the method from the **Methods list**.
2 Tap ▶ **Start method**.
3 Perform the necessary actions to weigh your sample.
4 Open an Excel sheet and place the cursor in a first target cell, for example, "A1".
5 Tap ✚ **Add result**.
   ➡ The weighing result is saved to the **Results list**.
   ➡ The weighing result is stored in cell "A1" of your Excel sheet.
   ➡ If the character **TAB** is used as delimiter, the other weighing parameters are stored in cells "B1", "C1", etc.
   ➡ If the character **Enter** is used to mark the end of the line, the cursor now appears in cell "A2".

5.8.3 Exporting and importing settings

The settings of the balance can be exported and imported. Transferring data from one balance to another is helpful, for example, to use the same method on several balances. It is also good practice to store the balance settings as backup before updating the software.

The following data can be imported and exported:

- **Balance settings**
  - When importing these settings, the GWP status of the balance might change (**GWP Approved mode**).
  - The balance might prompt to reboot.
- **Methods**
  - When importing methods, you can select if all methods or only selected methods are imported.
  - If importing a method with the same name as an existing method, you can select if you want the method to be overwritten or not.
- **Tests and weights**
  - When importing these settings, all the existing tests and test weights on the balance are erased and replaced by the imported data.

The data can be transferred via a USB storage device. For XPR balances, the data can also be transferred via a file server.

NOTICE

Data import can cause data loss

Importing data can delete user application data without warning.

5.8.3.1 Transferring test weight settings between balances

This example shows how to export test weight settings from one balance and import them on another balance. This procedure is particularly helpful if you are using the same calibrated weights to perform tests on several balances. The data is transferred using a USB storage device.

Exporting data and settings

Navigation: ⚙ Balance menu > Maintenance > Import / Export

- A USB storage device is connected to the balance.

1 Navigate to the section **Import / Export**.
   - The dialog **Import / Export** opens.
2 Select **Export data and settings** and tap → **Next**.
   - The dialog **Export data and settings** opens.
3 Deactivate all data types except **Tests and weights**.
4 Tap ✓ **Export**.
   - A list of available USB storage devices is shown.
5 Select the target USB storage device to store the data.
6 Tap → **Next**.
   - The system exports the data to the USB storage device.
   - If the export was successful, the display shows ✔ with the name of the file and the target folder.
7 Tap ✕ **Close** to finish the process.

Importing data and settings

Navigation: ⚙ Balance menu > Maintenance > Import / Export

- A USB storage device containing the data to import is connected to the balance.

1 Navigate to the section **Import / Export**.
   - The dialog **Import / Export** opens.
2 Select **Import data and settings** and tap → **Next**.
   - A list of available USB storage devices is shown.
3 Select the USB storage device containing the data to import.
4 Tap → **Next**.
5 Select which file you want to import.
6 Tap → **Next**.
7 To import only the test weights, select the data type **Test weights**.
8 Tap ✓ **Import**.
   - The system imports the data from the USB storage device.
   - If the import was successful, the message **Import of data and settings has been executed.** appears.
9 Tap ✕ **Close** to finish the process.

5.9 Tolerance profiles

Navigation: ⚙ Balance menu > ⚙ Settings > Balance > Weighing / Quality > Tolerance profiles

Creating a Tolerance profile

1 Tap + **New** to create a new profile.
2 Define the profile settings.
3 When all the settings have been defined, tap ✓ **OK**.
   - The system returns to the profile list and the new profile appears on the list.

By tapping an existing profile, its settings can be changed, the profile can be deleted or it can be set as default value. Several profiles can be created. A default profile must be selected.

If changes are made to the default tolerance profile, the status of the routine tests will be set to **Never executed**.

5.10 Password protection and balance reset

The balance settings or the whole balance can be blocked to prevent unauthorized modifications or usage. An unblocking password first needs to be created.

NOTICE

Unusable balance due to forgotten password

A blocked balance cannot be unblocked without the unblocking password.

– Note the password and keep it in a safe place.

5.10.1 Creating an unblocking password

Navigation: Balance menu > Settings > Balance > General

1 To create an unblocking password, tap ••• **More** in the action bar and select **Unblocking password**

➡ The dialog **Set unblocking password** opens.

2 Set a new password, confirm it, and tap ✓ **OK**.

3 In the dialog **General**, tap ✓ **Save** and ✓ **OK**.

➡ The unblocking password is created.

➡ The additional option **Blocking** is available in the action bar of the **Balance menu**. It can be used to block the balance or block/unblock the balance settings.

5.10.2 Blocking and unblocking the settings

Blocking the settings prevents unauthorized modifications of the settings of the balance. If **Lock method** is activated for a specific method, blocking the balance settings also prevents unauthorized changes of the method settings. Further usage of the balance is possible, but the settings cannot be edited without the unblocking password (except **Language**).

Navigation: Balance menu > Blocking

5.10.2.1 Blocking the balance settings

■ The unblocking password is available.

1 To block the balance settings, tap **Block settings**.

➡ The dialog **Block balance** opens.

2 Tap ✓ **OK** to block the settings.

➡ The balance settings are blocked. The balance can be used normally, but the balance and method settings cannot be edited.

5.10.2.2 Blocking method settings

■ The balance settings are not blocked.

■ The unblocking password is available.

1 Select a method from the **Methods list** or define a new method.

2 Tap **Edit**.

3 Tap **General** and set **Lock method** to **Active**.

4 Tap ✓ **Save**.

5 To block the balance settings, tap **Block settings**.

➡ The dialog **Block balance** opens.

6 Tap ✓ **OK** to block the settings.

➡ The balance settings are blocked. The balance can be used normally, but the balance and method settings cannot be edited.

➡ If **Lock method** is set to **Active** after the balance settings are blocked, the method can be edited until the next time the balance is blocked.

5.10.2.3 Unblocking the settings

- The balance settings are blocked.
- The unblocking password is available.

1 To unblock the balance settings, tap **Unblock settings**.

2 Type the unblocking password and tap ✓ **OK**.

➡ The balance settings are unblocked.

5.10.3 Blocking and unblocking the balance

Blocking the balance will prevent any further usage of the balance.

5.10.3.1 Blocking the balance

≡ **Navigation: ⚙ Balance menu > Blocking**

1 To block the balance, tap **Block balance**.

➡ The dialog **Block balance** opens.

2 Tap → **Next**.

3 Enter your unblocking password and tap ✓ **Block balance**.

➡ The balance is blocked and the blocking screen appears.

5.10.3.2 Unblocking the balance

- The balance is blocked and the blocking screen is open.

1 Tap **Unblock balance**.

2 Type in the unblocking password, if applicable.

3 Tap ✓ **Unblock balance** to confirm.
By tapping ✕ **Cancel** instead, the main weighing screen appears, but the balance is still blocked and only a limited number of settings can be edited.

➡ The balance is unblocked and the main weighing screen appears.

5.10.4 Resetting the balance

≡ **Navigation: ⚙ Balance menu > Maintenance > Reset**

NOTICE

Reset causes data loss

Resetting the balance will delete user application data and set the user configuration back to factory state.

1 To delete the data for test history and adjustment history, activate the option **Also delete test and adjustment history**.

2 Tap → **Next**.

➡ The window **Reset balance** opens and warns that some data will be lost by resetting the balance.

3 Tap **Reset balance**.

➡ The balance software restarts in factory state.

6 Software Description

6.1 Balance menu settings

The **Balance menu** contains general settings and information. To open the section **Balance menu**, tap the symbol ⚙ on the right-hand side of the display.

The section **Balance menu** is divided into the following subsections.

- **Leveling aid** (see [Leveling aid ▸ Page 70])
- **History** (see [History ▸ Page 70])
- **Balance info** (see [Balance info ▸ Page 71])
- **Settings** (see [Settings ▸ Page 71])
- **Maintenance** (see [Maintenance ▸ Page 81])

6.1.1 Leveling aid

Exact horizontal positioning and stable installation is essential for repeatable and accurate weighing results. With the **Leveling aid** the balance can be leveled.

Navigation: ⚙ Balance menu > Leveling aid

Note

After leveling the balance an internal adjustment must be performed.

6.1.2 History

The balance permanently records the tests and adjustments that are performed in the section **History**

Navigation: ⚙ Balance menu > History

The section **History** is divided into the following subsections:

- **Adjustments**
- **Tests**
- **Service**

6.1.2.1 Adjustments

Navigation: ⚙ Balance menu > History > Adjustments

A maximum of 500 entries can be stored in the adjustments history.

Button	Name	Description
	Filter	Tap to filter the list: • **By date range** • **By user name**
	Print	Tap to print the displayed entries.
	Close	Tap to return to the section **History**.

6.1.2.2 Tests

Navigation: Balance menu > History > Tests

A maximum of 500 entries can be stored in the test history.

Button	Name	Description
	Filter	Tap to filter the list: • **By date range** • **By user name**
	Print	Tap to print the displayed entries.
	Close	Tap to return to the section **History**.

6.1.2.3 Service

Navigation: Balance menu > History > Service

A maximum of 500 entries can be stored in the service history.

Button	Name	Description
	Filter	Tap to filter the list: • **By date range** • **By technician**
	Print	Tap to print the displayed entries.
	Close	Tap to return to the section **History**.

6.1.3 Balance info

Navigation: Balance menu > Balance info

The section **Balance info** shows information about the specific balance about:

- **Identification**
- **Hardware**
- **Software**
- **Maintenance**

Button	Name	Description
	License agreement	Tap to open the licence agreement.
	Close	Tap to return to the **Balance menu**.

6.1.4 Settings

This section describes the settings of the balance that can be changed to suit specific requirements. The balance settings apply to the entire weighing system.

Navigation: Balance menu > Settings

The section **Settings** is divided into the following subsections:

- **Balance**
- **Interfaces**
- **Devices / Printers**
- **LabX / Services**

6.1.4.1 Balance

Navigation: Balance menu > Settings > Balance

The section **Balance** is divided into the following subsections:

- **Weighing / Quality**
- **Doors**
- **Date / Time / Language / Format**
- **Screen / StatusLight / Sound**
- **General**

Weighing / Quality

Navigation: Balance menu > Settings > Balance > Weighing / Quality

Parameter	Description	Values
Leveling warning	Defines the action when the balance is out of level When **Forced leveling** is selected and the balance is out of level, no weighing value can be added to the **Results list** (green button disabled). For approved balances, this setting is set to **Forced leveling** and cannot be edited.	Inactive I Optional leveling* I Forced leveling
Tolerance profiles	A tolerance profile stores all the necessary balance settings needed for a certain weighing method. It is possible to create different tolerance profiles for different weighing methods. This section contains several settings that are described in the table **Tolerance profiles** below.	
Automatic weight value output	Defines if and in which manner (**MT-SICS** and/or **HID**) the weighing values should be exported. This section contains several settings that are described in the table **Automatic weight value output** below.	

GWP Approved mode	Good Weighing Practice (GWP®) is a program started by METTLER TOLEDO to help customers operate their weighing equipment in a safe and efficient way. It covers every relevant step in the life cycle of the instrument and provides clear guidance on how to specify, calibrate and operate weighing instruments. The GWP Approved mode observes if the following conditions are given: • Use of an appropriate tolerance profile. • The internal adjustment was successful. • Required tests were successful. • Setting up of enforced leveling. • No MinWeigh violation. If all conditions are given, the balance adds the GWP Approved sign behind every weighing result. The **GWP Approved mode** can only be enabled by a METTLER TOLEDO service technician.	Active I Inactive*
Balance recalib. reminder	Defines whether the user is reminded about the upcoming expiry date of the calibration.	Active* I Inactive
Days in advance	Defines the number of days before the due date the recalibration reminder is shown. This setting is only available if **Balance recalib. reminder** is set to **Active**.	Numeric (30 days* I 0…400 days)
Action when calib. expired	Defines the action when the calibration has expired. **Block**: The balance will be blocked. In this case, the balance cannot be used anymore until a user unblocks the balance.	None* I Block
Days before blocking	Defines the number of days before the reminder informs about the upcoming expiry date.	Numeric (30 days* I 0…400 days)
Weight recalib. reminder	Defines whether the user is reminded about the upcoming expiry date of the test weight calibration.	Active I Inactive*
Days in advance	Defines the number of days before the due date the recalibration reminder is shown. This setting is only available if **Weight recalib. reminder** is set to **Active**.	Numeric (30 days* I 0…400 days)
Service reminder	Defines whether the user is reminded about the upcoming due date of the service.	Active I Inactive*
Days in advance	Defines the number of days before the due date the service reminder is shown. This setting is only available if **Service reminder** is set to **Active**.	Numeric (30 days* I 0…400 days)

* Factory setting

Tolerance profiles

Settings relating to weighing performance and data from balance calibration can be stored in a tolerance profile.

For more information about creating tolerance profiles, see [Tolerance profiles ▸ Page 67]

Parameter	Description	Values
Name	Defines the name of the profile.	Text (0…22 characters)
Indicator	Defines the color of the indicator icon for the tolerance profile. The icon will appear above the weighing value unit. When a color is selected, a description of maximum 3 characters can be added.	None* I Neutral I White I Yellow I Red I Blue I Green I Black
Indicator text	Defines the text of the indicator icon.	Text (0…3 characters)

Calibration certificate	Selects a calibration certificate from a drop-down list of certificates available on the balance. New certificates can only be created by a service technician based on a performed balance calibration.	Calibration certificate I None*
Environment	Defines the environmental conditions of the balance. **Very stable**: For an environment that is free from any drafts and vibrations. **Stable**: For an environment that is practically free from drafts and vibrations. **Standard**: For an average working environment subject to moderate variations in the ambient conditions. **Unstable**: For an environment where the conditions are from time to time changing. **Very unstable**: For an environment where the conditions are continuously changing.	Very stable I Stable I Standard* I Unstable I Very unstable
Weighing mode	Defines the filter settings of the balance. **Universal**: For all standard weighing applications. **Sensor mode**: Depending on the setting of the ambient conditions, this setting delivers a filtered weighing signal of varying strength. The filter has a linear characteristic in relation to time (not adaptive) and is suitable for continuous measured value processing.	Universal* I Sensor mode
Value release	Defines the speed at which the balance regards the measured value as stable and available for capture. **Very fast**: recommended if you require fast results and repeatability is not very important. **Very reliable**: provides very good repeatability of the measured results but prolongs the stabilization time. Some intermediate settings can also be chosen from.	Very fast I Fast I Fast and reliable* I Reliable I Very reliable
Display readability	Determines the readability **d** of the balance display. **1d**: Shows the maximum resolution **2d**: 2 times smaller resolution **5d**: 5 times smaller resolution **10d**: 10 times smaller resolution **100d**: 100 times smaller resolution **1000d**: 1000 times smaller resolution For approved balances, the values available for this setting depend on the balance model.	1d* I 2d I 5d I 10d I 100d I 1000d
Zero drift compensation	The function **Zero drift compensation** performs ongoing corrections of deviations from zero which may occur, for example, as a result of small amounts of dirt on the weighing pan. For approved balances, the values available for this setting depend on the balance model.	Active* I Inactive
Allowed units	Defines the units that are allowed in this tolerance profile.	The available values are model-specific.

* Factory setting

Automatic weight value output

The balance can be connected to a computer with a USB cable. Weighing results can then be directly transferred to a target application, e.g., Microsoft Excel.

Parameter	Description	Values
Output mode	Defines which weighing values are transferred via the communication interface, e.g., USB, Ethernet. **Results**: The weighing values are transferred only when they are added to the **Results list**. **Continuous**: The weighing values are transferred continuously via the interface defined under **LabX / Services** > **MT-SICS**. Additional fields are available, depending on the chosen option.	Results* I Continuous
Target	Defines the way the weighing values are transferred. **HID** (Human Interaction Device): Transfers simple character streams (e.g. weight values) to a desktop computer without installing additional drivers (comparable to a keyboard). The format of a transferred weighing value can be configured. **MT-SICS**: The data is transferred in MT-SICS format (METTLER TOLEDO Standard Interface Command Set). MT-SICS operates bidirectional, i.e. usually balance sends the confirmations to the host and receives commands. A separate reference manual is available for MT-SICS. **HID / MT-SICS**: The data is transferred in HID and MT-SICS format in parallel. **MT-SICS configurable**: The data is transferred in a user-defined MT-SICS format. This setting is only available if **Output mode** is set to **Results**.	HID* I HID / MT-SICS I MT-SICS I MT-SICS configurable
Result ID 1 Result ID 2	Defines if the fields **Result ID 1** and **Result ID 2** are included in the output, respectively. Supported characters are: • numbers: 0 – 9 • letters: a – z and A – Z • special characters: space, dot, comma, semicolon, plus, minus Non-supported characters will be replaced by a space. This setting is only available if **Output mode** is set to **Results**.	Active I Inactive*
Date	Defines if the field **Date** is included in the output. The format of the date is **YYYY-MM-DD**. This setting is only available if **Output mode** is set to **Results**.	Active I Inactive*
Time	Defines if the field **Time** is included in the output. The format of the time is **hh-mm-ss**. This setting is only available if **Output mode** is set to **Results**.	Active I Inactive*
Net indicator	In the standard output format, net weights are not specially marked. To place an N in front of net weights, this function can be activated. The net symbol is left-justified in the field. This setting is only available if **Output mode** is set to **Results**.	Active I Inactive*
Net indicator field length	Defines the field length of the Net indicator. This setting is only available if **Output mode** is set to **Results** and **Net indicator** is set to **Active**.	Numeric (2* I 1…2)

Weight field length	Defines the number of digits that will be transferred into the application on the computer, e.g., into an Excel field. This setting is only available if **Output mode** is set to **Results**.	Numeric (1* I 0...20)
Sign	Defines if the weighing result is displayed with an algebraic sign. **For all values**: Each weighing result is preceded by a plus or minus sign. **For negative values**: Only negative values are preceded by a minus sign. Positive values are transferred without algebraic sign. This setting is only available if **Output mode** is set to **Results**.	For all values I For negative values*
Sign position	Defines if the algebraic sign is positioned at the first place of the weight field or directly in front of the weight digits. This setting is only available if **Output mode** is set to **Results**.	Left of weight field I Left of weight digits*
Decimal delimiter	Defines the character used to separate the whole and fractional part of a numeric value. This setting is only available if **Output mode** is set to **Results**.	, I .*
Unit	Defines if a weighing unit is being shown in the weighing field. This setting is only available if **Output mode** is set to **Results**.	Active* I Inactive
Unit field length	Defines the field length of the weighing unit. This setting is only available if **Output mode** is set to **Results** and **Unit** is set to **Active**.	Numeric (1* I 1...6)
Field delimiter	Defines a character or sequence of characters to separate data fields. This setting is only available if **Output mode** is set to **Results**.	None I Space* I TAB I , I ;
End of line character	Defines a character or sequence of characters signifying the end of a line. This setting is only available if **Output mode** is set to **Results**.	CRLF I CR I LF I TAB I None I Enter*
Updates/sec.	Defines the rate at which data is transferred. This setting is only available if **Output mode** is set to **Continuous**.	2 I 5 I 6* I 10
Format	Defines the format of the transferred data. This setting is only available if **Output mode** is set to **Continuous**.	MT-SICS* I PM I AT/MT

* Factory setting

Doors

Navigation: Balance menu > Settings > Balance > Doors

Each of the following doors can be managed separately:

- **Door left**
- **Door right**

Parameter	Description	Values
Drive mode	Defines the mode to open/close the door.	Motorized* I Manual
Door opening	Defines how far the door opens. This setting is only available if **Drive mode** is set to **Motorized**. Enter the value manually or capture it by tapping on . The door will be open with the configured value.	Numeric (1…100%)
Door key left	Defines the automation of the left door key on the terminal.	Active I Inactive*
Door key right	Defines the automation of the right door key on the terminal.	Active I Inactive*

Devices	Defines the door opening or closing via an external device, such an ErgoSens or a foot switch. If set to **Active**, the **Function** of the corresponding device also needs to be set to **Door**. See **Devices / Printers**.	Active I Inactive*
Automatic (Tare / Zero / Result)	Closes the door automatically when taring the balance, zeroing the balance, or adding a result to the **Results list**.	Active I Inactive*

* Factory setting for the right door / for the left door reverse

See also

Devices / Printers ▸ Page 79

Date / Time / Language / Format

Navigation: Balance menu > Settings > Balance > Date / Time / Language / Format

Parameter	Description	Values
Date	Defines the current date.	Date
Time	Defines the current time. Use the plus/minus buttons to define the time.	Time
Language	Defines the language of the interface navigation.	English I Deutsch I Français I 日本語 I 中文 I Español I Italiano I Русский I Português I Polski I Magyar I Čeština
Time zone	Selects a time zone. When the time zone is set, the balance changes automatically between summer and winter time.	see list on the screen
Date format	Selects the date format.	D.MMM.YYYY* I MMM D YYYY I DD.MM.YYYY I MM/DD/YYYY I YYYY-MM-DD I YYYY/MM/DD I YYYY年M月D日
Time format	Selects the time format.	24:MM* I 12:MM I 24.MM I 12.MM
Keyboard layout	Defines the language of the keyboard layout.	English I German I French I Spanish I Japanese I Simplified Chinese I Russian I Czech I Polish I Hungarian

* Factory setting

Screen / StatusLight / Sound

Navigation: Balance menu > Settings > Balance > Screen / StatusLight / Sound

Parameter	Description	Values
Screen brightness	Defines the brightness of the display.	20 % I 40 % I 60 % I 80 %* I 100 %
Sound volume	Defines the volume of the terminal sound.	Inactive I 20 % I 40 % I 60 %* I 80 % I 100 %
Sound on key press	Defines if there is a sound when a key is pressed.	Active* I Inactive

Sound on info	Defines if there is a sound when an information appears on the screen.	Active* I Inactive
Sound on warning	Defines is there is a sound when a warning appears on the screen.	Active* I Inactive
Sound on error	Defines is there is a sound in case of an error.	Active* I Inactive
StatusLight	Activates/deactivates the **StatusLight**. **Active (without green light)**: All current status of the balance are monitored, the red/yellow lights will turn on if needed, but the green light will stay turned off. • **StatusLight** is red: Error. The balance must not be used until the error is corrected. • **StatusLight** is yellow: Warning. For example, the test manager has pushed a test to the balance or you are operating the balance between the date of the calibration reminder and the scheduled date of the next calibration. The balance can still be used. • **StatusLight** is green or off: Ok. No problems detected and the balance is ready to weigh.	Active* I Active (without green light) I Inactive
StatusLight brightness	Defines the brightness of the activated **StatusLight**. This setting is only available if **StatusLight** is set to **Active** or **Active (without green light)**.	20 % I 40 % I 60 %* I 80 % I 100 %

* Factory setting

General

Navigation: Balance menu > Settings > Balance > General

Parameter	Description	Values
Balance ID	Defines the ID of the balance. This name could be used to communicate with the balance over a network. No space or special characters are allowed.	Text (0...22 characters)
Standby	Defines if the balance automatically enters standby mode after not being used for a predefined **Wait time**. The standby mode can always be started manually by pressing ⏻.	Active* I Inactive
Wait time	Defines after how long the balance automatically switches to standby mode when not used. This setting is only available if **Standby** is set to **Active**.	Numeric (10 minutes* I 0...60 minutes)
Software update on system start-up	With this option activated, software update can be performed from a USB storage device on startup.	Active* I Inactive

6.1.4.2 Interfaces

Navigation: Balance menu > Settings > Interfaces

The section **Interfaces** has the following subsection:

- **Ethernet**
- **Bluetooth**

Ethernet

The **Ethernet** interface allows to connect the balance to a network in order to:

- communicate remotely with the balance using the MT-SICS communication protocol or LabX

Navigation: Balance menu > Settings > Interfaces > Ethernet

Parameter	Description	Values
Host name	Defines the balance host name.	Text (1…22 characters)
MAC address	Information on the MAC address (Media Access Control) that is used to uniquely identify the balance in the network.	
Network configuration	**DHCP**: The settings of the Ethernet connection will be automatically set. **Manual**: The settings of the Ethernet connection must be set manually by the user.	DHCP* I Manual
IP address	If the IP is not to be automatically obtained, you can enter it here.	000.000.000.000… 255.255.255.255
Subnet mask	Defines the subnet mask that is used by the TCP/IP protocol to determine whether a host is on the local subnet or on a remote network.	000.000.000.000… 255.255.255.255
DNS server (primary)	Defines the address of the primary DNS (domain name system) server.	000.000.000.000… 255.255.255.255
DNS server (secondary)	Defines the address of the secondary DNS server.	000.000.000.000… 255.255.255.255
Default gateway	Defines the address of the default gateway that links the host's subnet to other networks.	000.000.000.000… 255.255.255.255

* Factory setting

Bluetooth

Navigation: Balance menu > Settings > Interfaces > Bluetooth

Bluetooth identification

Parameter	Description	Values
Activation	With the option **Bluetooth** you have the possibility to communicate with a printer via Bluetooth.	Inactive* I Active

* Factory setting

6.1.4.3 Devices / Printers

Navigation: Balance menu > Settings > Devices / Printers

This section is divided into the following subsections:

- **Printer**
- **Barcode reader**
- **ErgoSens**
- **Foot switch**

Printer

Navigation: Balance menu > Settings > Devices / Printers > Printer

Printer settings

Parameter	Description	Values
Printer category	Defines the type of the printer. **Strip printer**: to print weighing results on strip paper **Label printer**: to print weighing results on labels	Strip printer I Label printer*
Device	Allows to activate or deactivate the device.	Activated* I Deactivated

Line end	Defines the line end character for printing. The values set here have to match the printer settings. This setting is only available for strip printers.	<CR> <LF>* I <CR> I <LF>
Character set	Defines the communication specific character code. The values set here have to match the printer settings. This setting is only available for strip printers.	ANSI/WIN I IBM/DOS I UTF8*

* Factory setting

Barcode reader

Navigation: Balance menu > Settings > Devices / Printers > Barcode reader

Once connected to a USB port of the balance, the device is automatically recognized. The settings can be consulted here.

ErgoSens

Navigation: Balance menu > Settings > Devices / Printers > ErgoSens

Parameter	Description	Values
Function	Defines which function is to be executed when triggering the device. If set to **Door**, the setting **Balance** > **Doors** > **Devices** needs to be specified.	None* I Door I Zero I Tare I Add result

* Factory setting

Foot switch

Navigation: Balance menu > Settings > Devices / Printers > Foot switch

Parameter	Description	Values
Function	Defines which function is to be executed when triggering the device. If set to **Door**, the setting **Balance** > **Doors** > **Devices** needs to be specified.	None* I Door I Zero I Tare I Add result

* Factory setting

See also

- Printer ▸ Page 54
- Barcode reader ▸ Page 58
- Foot switch and ErgoSens ▸ Page 59
- Doors ▸ Page 76

6.1.4.4 LabX / Services

Several services are available to communicate with the balance: **LabX service**, **MT-SICS service**, or **Web service**. Note that only one service can be enabled at any given time.

To enable communication between LabX and instruments, the appropriate settings on the instruments must correspond with the settings in LabX. LabX synchronizes the date and time on the instruments with the LabX Server each time a connection is made and each time a task is started. When an instrument is connected, the user interface language on the connected instrument is changed to the language currently installed on the LabX installation.

Navigation: Balance menu > Settings > LabX / Services

Parameter	Description	Values
LabX service	**Inactive**: No connection to LabX will be established. **Network**: A network connection to LabX will be established on startup. The **Port** must be specified. **USB**: A USB connection to LabX will be established on startup.	Inactive* I Network I USB
MT-SICS service	**Inactive**: No MT-SICS port will be opened. **Network**: An MT-SICS network port will be opened on startup. The **Port** must be specified. **USB**: An MT-SICS USB port will be opened on startup.	Inactive* I Network I USB
Web service	If set to **Active**, a network port will be opened on startup. Use the menu **Web service configuration** to configure the service. The complete **Web service** documentation is available online: www.mt.com/labweighing-software-download.	Inactive* I Active

* Factory setting

See also

- LabX service ▸ Page 61
- MT-SICS service ▸ Page 62
- Web service ▸ Page 63

6.1.4.5 Printing the settings

Navigation: Balance menu > Settings > ··· More

When all the balance settings are configured, you can print the complete list to archive the information.

– To print the balance settings, tap **Print the settings**.
  ➡ The complete balance settings are printed.

6.1.5 Maintenance

Navigation: Balance menu > Maintenance

The section **Maintenance** is divided into the following subsections:

- **Import / Export**
- **Software update**
- **Reset**
- **Service menu**

See also

- Data management ▸ Page 64
- Software update ▸ Page 142
- Resetting the balance ▸ Page 69

6.1.5.1 Service menu

Navigation: Balance menu > Maintenance > Service menu

Icon	Name	Description
	Device errors	Tap to display the code of an error. This error code can be useful in your communication with METTLER TOLEDO when troubleshooting your device. The icon depends on the severity of the error: critical error, warning, or information. The icons of device errors only appear when an error with an error code is ongoing on the device.
	Show adjustment state	Tap to open information about: • **Prescaler** • **Temperature compensation** • **Production linearization** • **Standard calibration** • **Production calibration** • **User linearization** • **User calibration**
	Save support file	Tap to save support file (all relevant information to an error) on a USB storage device to send it to a METTLER TOLEDO representative.
	Import log configuration	A log configuration file can be provided by METTLER TOLEDO to allow a more comprehensive collection of balance parameters to be stored in the support file. This is only used for troubleshooting purposes. Tap to import the log configuration from a USB storage device so that the enhanced list of parameters can be exported and sent to a METTLER TOLEDO representative.
→0←	**Perform initial zero**	Tap to perform an initial zero of the balance. This can be useful when using accessories whose weight exceeds the zeroing range of the balance, for example a density kit. This function is only available for approved balances.

6.2 Weighing methods settings

6.2.1 Settings: method "General weighing"

In this section, the settings of the methods **General weighing** and **General weighing (itemized)** are described. Settings can be edited for a newly created method or an already existing method.

Navigation: Methods > Methods list > my general weighing > Edit

The settings of the method **General weighing** are grouped as follows:

- **General**
- **ID format**
- **Weighing**
- **Weighing item**, only available for the method **General weighing**
- **Weighing items**, only available for the method **General weighing (itemized)**
- **Automation**
- **Print / Export**

See also

Creating a method "General weighing" ▸ Page 34

Editing a method ▸ Page 41

6.2.1.1 General

The **Method type** is defined in the wizard while creating the method and cannot be changed.

Parameter	Description	Values
Method name	Defines the name of the method.	Text (1…22 characters)
Comment	The method can be described with a comment.	Text (0…128 characters)
Lock method	Locks the method to prevent further editing.	Active I Inactive*

* Factory setting

6.2.1.2 ID format

Task IDs

Parameter	Description	Values
Number of task IDs	Defines the number of task IDs. If the **Number of task IDs** is larger than 0, the settings **Task ID**, **Task description** and **Prefix/Default value** are available for every single task ID.	0 I 1* I 2
Task ID 1	Defines the naming type of the task ID. **Manual with default**: The value of the task ID can be entered manually at method execution time. **Automatic timestamp**: The system provides a value created from a prefix with the current date and time appended.	Manual with default* I Automatic timestamp

Task description	Allows to define a label for each task ID field.	Text (0…32 characters)
Default value	Defines a default value for the task ID. The value of the task ID can be changed manually while executing the method. This setting is only available when the corresponding **Task ID** is set to **Manual with default**.	Text (0…32 characters)
Prefix	Defines a prefix for the task ID. This setting is only available is the corresponding **Task ID** is set to **Automatic timestamp**.	Text (0…32 characters)

* Factory setting

Result IDs

Parameter	Description	Values
Number of result IDs	Defines the number of result IDs. If the **Number of result IDs** is larger than 0, the settings **Result ID**, **Result description** and **Prefix/Default value** are available for every single result ID.	0 I 1* I 2
Result ID 1	Defines the naming type of the result ID. **Manual with default**: The value of the result ID can be entered manually at method execution time. **Automatic counter**: The system provides a value created from a **Prefix** to which is appended a unique number (counter).	Manual with default* I Automatic counter
Result description	Allows to define a label for each result ID.	Text (0…32 characters)
Default value	Defines a default value for the result ID. The value of the result ID can be changed manually while executing the method. This setting is only available when the corresponding **Result ID** is set to **Manual with default**.	Text (0…32 characters)
Prefix	Defines a prefix for the result ID. This setting is only available if the corresponding **Result ID** is set to **Automatic counter**.	Text (0…32 characters)

* Factory setting

6.2.1.3 Weighing

Custom unit

When the parameter **Define custom unit** is activated, additional parameters can be defined.

Parameter	Description	Values
Define custom unit	With this option activated, a specific weighing unit can be defined. This allows calculations, e.g., surfaces or volumes, to be carried out directly during the determination of the weighing result. If a custom unit is defined, this unit is added to the list of available units throughout the method.	Active I Inactive*
Name	Defines the name of the custom unit.	Text (0…6 characters)
Formula	Defines how subsequently defined value for **Factor** is calculated. There are 2 formulae available: **Multiplicative**: Multiplies the net weight by the factor. **Divisive**: The factor is divided by the net weight. The formula can be used, for example, to simultaneously take into account a known error factor while weighing.	Multiplicative* I Divisive

Factor	Defines the factor with which the effective weighing result (net weight) is calculated via the previously selected **Formula**.	Numeric
Display readability	Defines the formatting for the weighing result. Example: A setting of "0.05" defines two places after the decimal point with rounding to 5. A determined result of 123.4777 is consequently displayed as 123.50. This function can only be used to reduce the resolution of the weighing result. No value must therefore be entered that exceeds the maximum balance resolution. Values that are too small are automatically rounded off.	Numeric

* Factory setting

Weighing settings

Parameter	Description	Values
Tolerance profile	A tolerance profile stores all the necessary balance settings needed for a certain weighing method. It is possible to create different tolerance profiles for different weighing methods.	Tolerance profiles are created by the user for specific balances and applications.
Weight capture mode	Defines the behavior when the button to add the result was tapped or the add result was triggered by the automatic weighing result creation. **Stable**: The system waits for a stable weight. **Immediate**: The system doesn't wait for a stable weight. The system waits for the defined amount of seconds (**Weight capture delay**). After the weight capture delay, the weight value from the weight stream is captured.	Stable* I Immediate
Weight capture delay	Defines the time in seconds the balance waits for capturing the weight after the button to add the result was tapped or the add result was triggered by the automatic weighing result creation. This setting is only available if **Weight capture mode** is set to **Immediate**.	Numeric (5 seconds* I 0…60 seconds)

* Factory setting

Statistics

Parameter	Description	Values
Activate statistics	If **Activate statistics** is set to **Active**, the following statistics will be calculated: **Count**: Number of items used for the statistics **Sum**: sum of all value (decimal places and unit according to the method settings) **Minimum**: smallest value (decimal places and unit according to the method settings) **Maximum**: largest value (decimal places and unit according to the method setting) **Range**: difference between the largest and smallest values (decimal places and unit according to the method settings) **Average**: The values are summed up and divided by the number of values, rounded to 1 digit more than the configured decimal places in the associated tolerance profile (unit according to the method settings). **Standard deviation**: standard deviation rounded to 1 digit more than the configured decimal places in the associated tolerance profile (unit according to the method settings) **Relative standard deviation**: relative standard deviation (rounded to 2 decimal places, in %) The statistical values are calculated and displayed as soon as a result is added or updated.	Active I Inactive*

* Factory setting

Electrostatic

Parameter	Description	Values
Ionizer	Defines whether the ionizer is activated/deactivated.	Active I Inactive*

* Factory setting

See also

Creating a method "General weighing" ▸ Page 34

6.2.1.4 Weighing item / Weighing items

A target weight with tolerance limits can be defined for the method. The method **General weighing** includes a single item in **Weighing item**, whereas several items can be defined for the method **General weighing (itemized)** in **Weighing items**.

Parameter	Description	Values
Sample ID	Defines the name of the sample. This setting is only available for methods containing several weighing items (itemized).	Text (0…32 characters)
Unit	Defines the unit of the weighing result.	The available units depend on the balance model.
Target weight	Defines the target weight. The target weight will be shown in the weighing-in aid of the balance (SmartTrac). When a target weight including tolerances is defined, the SmartTrac indicates if the current display weight is in tolerance or not.	Numeric
-Tolerance	Defines the lower tolerance limit. This setting is only available if a **Target weight** is defined.	Numeric

+Tolerance	Defines the upper tolerance limit. This setting is only available if a **Target weight** is defined.	Numeric

See also

- Creating a method "General weighing" ▸ Page 34
- Using methods with multiple weighing items (itemized) ▸ Page 42

6.2.1.5 Automation

Parameter	Description	Values
Barcode data target	If a barcode reader is connected to the balance, this option defines how the data is to be processed. **Keyboard Input**: The data is written in the currently open input window. If no input window is open, the data is ignored. **Target weight value**: The barcode data is interpreted as a value for the target weight. **Task ID 1**: The received barcode data is treated as identification text for this task ID. **Result ID 1**: The received barcode data is treated as identification text for this result ID. The available items in the drop-down menu depend on the **Number of task IDs** and **Number of result IDs** specified for the method. Make sure that the characters of the scanned barcode are compatible with the format of the field where they should be inserted.	Keyboard Input* I Target weight value I Task ID 1 I Result ID 1 I ...

* Factory setting

Weighing automation

Parameter	Description	Values
Automatic zero	**Active**: the balance is automatically zeroed when the weight falls below a predefined threshold. This setting is not available for approved balances.	Active I Inactive*
Automatic zero threshold	Defines the threshold of the **Automatic zero**. This setting is only available if **Automatic zero** is set to **Active**.	Numeric
Tare Mode	Defines the tare mode. **None**: No automatic tare. **Automatic tare**: The balance stores automatically the first stable weight as the tare weight. **Preset tare**: Allows you to enter manually a numerical entry of a fixed tare weight.	None* I Automatic tare I Preset tare
Automatic tare threshold	Defines the threshold of the option **Tare Mode**. This value defines the minimum weight that must be applied to the weighing pan so that it is automatically stored as the tare weight. If the weight is below the limits, it is not automatically transferred to the tare memory. Instead of entering the weight, the lightest tare container can be placed on the weighing pan and the button subsequently pressed. The applied weight is directly taken over as a limit. This setting is only available if **Tare Mode** is set to **Automatic tare**.	Numeric

Preset tare value	Defines a weight value for the pretare function. Instead of entering the value, the respective tare container can be placed on the weighing pan and the button subsequently pressed. The weight is directly taken over as pretare value. This setting is only available if **Tare Mode** is set to **Preset tare**.	Numeric
Automatic result	Automatically generates a weighing result after a threshold is reached. **None**: No automatic result will be generated. **With sample tare**: After a weight value that reached the threshold is being removed from the weighing pan, the balance is being tared. **Without sample tare**: After a weight value that reached the threshold is being removed from the weighing pan, the balance is not being tared.	None I With sample tare* I Without sample tare
Automatic result threshold	Defines the threshold of the **Automatic result**. The result is automatically added to the **Results list** only if the weight of the sample is larger than the defined threshold. This setting is only available if **Automatic result** is set to **Active**.	Numeric
Weight trigger	Defines the behaviour of the **Automatic result threshold**. **Exceeding**: The weighing result is generated when the weight exceeds the defined threshold. **Falling below**: The weighing result is generated when the weight falls below the defined threshold. This setting is only available if **Automatic result** is set to **Without sample tare**.	Exceeding* I Falling below
Automatic tare after result	If set to **Active**, the balance is automatically tared when a result is added to the **Results list**.	Active I Inactive*
Automatic task completion	**Active**: the balance automatically completes a running task after the result of the last weighing item has been added to the **Results list**. This setting is only available if the method is using multiple weighing items.	Active I Inactive*

* Factory setting

See also

Creating a method "General weighing" ▸ Page 34

6.2.1.6 Print / Export

Parameter	Description	Values
Strip printout and data export	Defines the content of the printout and/or export, as well as which printing/exporting actions are performed automatically when the task is complete. This section contains several settings that are described in the table **Strip printout and data export** below.	
Label printout for task	Defines the template of the task label to be printed, i.e., which data is included on the label and in which format. This section contains several settings that are described in the table **Label printout for task** below.	

Label printout for weighing item	Defines the template of the weighing item label to be printed, i.e., which data is included on the label and in which format. This section contains several settings that are described in the table **Label printout for weighing item** below.	
Label cutting	Defines if the labels should be cut after printing. **Per label**: Each label is cut once printed. **Per task**: The labels are cut when the task is complete. This setting is only relevant if the connected label printer can cut labels.	Off* I Per label I Per task

* Factory setting

6.2.1.6.1 Strip printout and data export

Automatic data output

Parameter	Description	Values
Strip printer	Activates/Deactivates automatic printing of the **Results list** on a strip printer when the **Complete** button is tapped. The data to be transmitted to the printer can be defined in the section **Template settings**.	Active I Inactive*
Results export	Activates/Deactivates the automatic data export to a USB storage device when the **Complete** button is tapped.	Active I Inactive*
Weight value	Activates/Deactivates the option to automatically send the weighing value over USB or Ethernet when tapping **Add result**.	Active I Inactive*

* Factory setting

Strip printout template

This menu item can be used to define which information is printed by the strip printer.

Each individual parameter can be set to **Inactive** or **Active** via the corresponding check box. To enable or disable all parameters at once, proceed as follows:

1 To disable all check boxes at once, tap **Deselect all**.
   ➡ All parameters are set to **Inactive**.
2 To enable all check boxes at once, tap **Select all**.
   ➡ All parameters are set to **Active**.

Template settings

Parameter	Description	Values
Header and Footer	Defines the header and/or footer to be printed.	Title I Title text I Date/time I User I Signature I Separating lines I Group titles
Balance information	Defines which information about the balance is printed.	Balance type I Balance ID I Balance serial number I Software version
Quality information	Defines which quality information is printed.	Tolerance profile I Adjustment date/time I Routine test name I Routine test last execution date I Routine test result I GWP Approved state I Level state I MinWeigh state

Task information	Defines which information about the task is printed.	Method name I Method comment I Task IDs I Custom unit settings I Automatic result settings I Count I Sum I Average I Minimum I Maximum I Range I Standard deviation I Relative standard deviation
Weighing item information	Defines which information about the weighing items is printed.	Show excluded weighing items I Result state I Result IDs I GWP Approved state I Electro-static charge I Level state I MinWeigh state I Tolerance state I Target and tolerances
Result detail information	Defines which information related to the result of the measurement is printed.	Weight I Tare weight I Gross weight I Info weight I Date/time I Stability

6.2.1.6.2 Label printout for task

Parameter	Description	Values
Automatic label printout for task	When set to **Active**, the task label is automatically printed when tapping **Complete**.	Active I Inactive*
Copies	Defines how many copies of the label are printed.	Numeric
Used template	Chooses the label template.	Available labels are shown below.

* Factory setting

Field settings

The content of each label field can be defined individually.

Parameter	Description	Values
Label field 1	Defines which information appears in each label field. The number of label fields depends on the selected template.	Available entries depend on the method settings.

Barcode settings

The content of each barcode field can be defined individually. This section is only available when the selected **Used template** contains at least one 2D code.

Parameter	Description	Values
Delimiter	Defines the delimiter between the barcode entries. This setting is only available when the selected **Used template** contains several 2D codes.	TAB* I Form feed I Carriage return I Space I User defined
Barcode field 1	Defines which information appears in each barcode. The number of the barcode fields depends on the selected template.	Available entries depend on the method settings.

* Factory setting

6.2.1.6.3 Label printout for weighing item

Parameter	Description	Values
Automatic label printout for weighing item	When set to **Active**, the weighing item label is automatically printed when tapping **Add result**.	Active I Inactive*
Copies	Defines how many copies of the label are printed.	Numeric
Used template	Chooses the label template.	Available labels are shown below.

* Factory setting

Field settings

The content of each label field can be defined individually.

Parameter	Description	Values
Label field 1	Defines which information appears in each label field. The number of label fields depends on the selected template.	Available entries depend on the method settings.

Barcode settings

The content of each barcode field can be defined individually. This section is only available when the selected **Used template** contains at least one 2D code.

Parameter	Description	Values
Delimiter	Defines the delimiter between the barcode entries. This setting is only available when the selected **Used template** contains several 2D codes.	TAB* I Form feed I Carriage return I Space I User defined
Barcode field 1	Defines which information appears in each barcode. The number of the barcode fields depends on the selected template.	Available entries depend on the method settings.

* Factory setting

6.2.1.6.4 Available labels

The following label layouts can be selected:

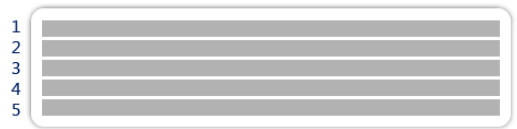

5 large fields

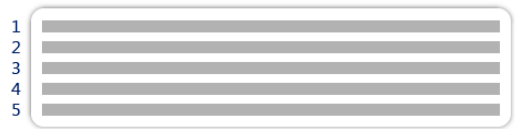

5 small fields

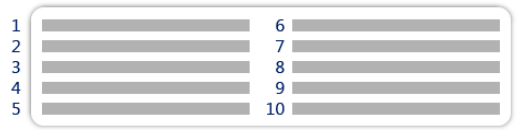

10 small fields

1D barcode with 3 large fields

1D barcode with 3 small fields

1D barcode with 6 small fields

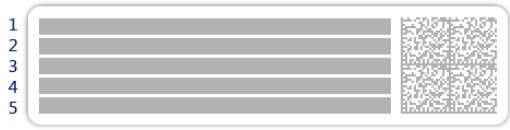 2D barcode with 5 large fields	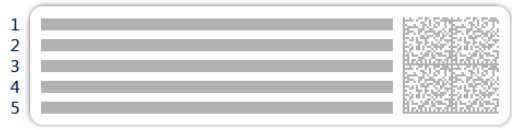 2D barcode with 5 small fields
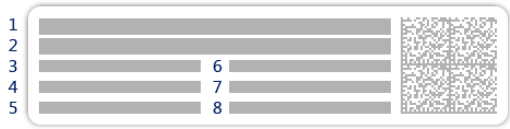 2D barcode with 2 large fields and 6 small fields	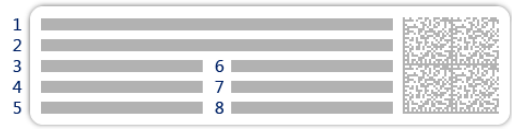 2D barcode with 8 small fields

6.2.2 Settings: method "Simple formulation"

Navigation: Methods > Methods list > my simple formulation > Edit

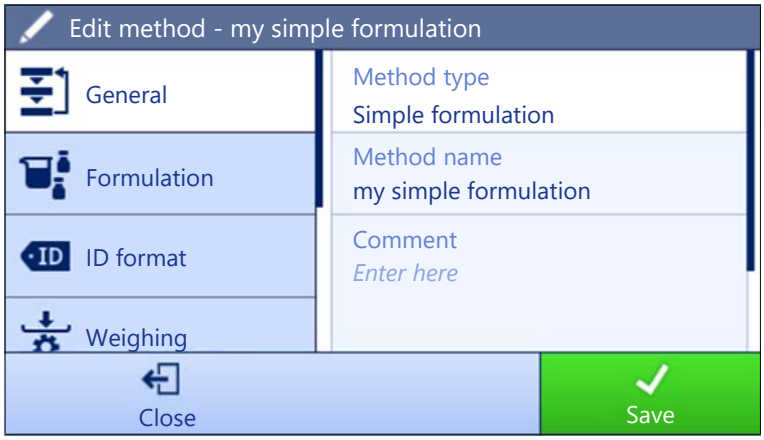

The settings of the method **Simple formulation** are grouped as follows:

- **General**
- **Formulation**
- **ID format**
- **Weighing**
- **Weighing item**, only available for the method **Simple formulation**
- **Weighing items**, only available for the method **Simple formulation (itemized)**
- **Automation**
- **Print / Export**

See also

Creating a method "Simple formulation" ▸ Page 36

Editing a method ▸ Page 41

6.2.2.1 General

The **Method type** is defined in the wizard while creating the method and cannot be changed.

Parameter	Description	Values
Method name	Defines the name of the method.	Text (1…22 characters)
Comment	The method can be described with a comment.	Text (0…128 characters)

Lock method	Locks the method to prevent further editing.	Active I Inactive*

* Factory setting

6.2.2.2 Formulation

Parameter	Description	Values
Calculate target	Defines the basis for the calculation of the target weight. **Flask volume**: Calculates the target weight according to the reference flask volume and the actual flask volume. **Target concentration**: Calculates the target weight according to the desired target concentration. This setting is only available for methods of the type **Simple formulation (itemized)**.	None* I Flask volume I Target concentration
Calculate concentration per component	Calculates the concentration of the final solution. If **Concentration unit** represents a molar concentration (**mol/l** or **mmol/l**), the calculation is based on: • **Purity** • **Reference flask volume** • **Molar mass** • weight of the component If **Concentration unit** represents a mass concentration (**mg/ml**, **mg/l**, **µg/ml**, **g/ml**, or **g/l**), the calculation is based on: • **Purity** • **Reference flask volume** • weight of the component If **Concentration unit** represents a mass ratio (**%**), the calculation is based on: • **Purity** • **Reference weight** • weight of the component	Active I Inactive*
Calculate amount of component	Calculates the amount of component (in **mol**) based on the **Molar mass** and weight of component.	Active I Inactive*
Concentration unit	Defines the concentration unit. This setting is only available if **Calculate concentration per component** is set to **Active**.	mol/l* I mmol/l I mg/ml I mg/l I µg/ml I g/ml I g/l I %
Reference flask volume	Defines the volume of the reference flask. This setting is only available if **Concentration unit** is not set to **%**.	Numeric (1 ml* I 1…999999 ml)
Reference weight (100%)	Defines the reference weight for the calculation of concentration of the component. Instead of entering the reference weight manually, place the reference weight on the weighing pan and tap the button . The applied weight is directly taken over as a reference weight. This setting is only available if **Concentration unit** is set to **%**.	Depending on the capacity of the balance.

* Factory setting

Production and expiry date

Parameter	Description	Values
Production date	Defines the production date. **Current date**: The production date is set automatically to the date when starting the weighing task. **Manual input**: The production date can be entered manually when starting the weighing task.	None I Current date* I Manual input
Expiry date	Defines the expiry date of the substance. **Period**: The expiry date is set automatically when starting the weighing task (expiry date = date when starting the weighing task + number of days defined in the field **Period**. **Manual input**: The expiry date can be entered manually when starting the weighing task.	None* I Period I Manual input
Period	Defines the period of the expiry date. This setting is only available if **Expiry date** is set to **Period**.	Numeric (1 day* I 1…9999 days)

* Factory setting

See also

Creating a method "Simple formulation" ▸ Page 36

6.2.2.3 ID format

Task IDs

Parameter	Description	Values
Number of task IDs	Defines the number of task IDs. If the **Number of task IDs** is larger than 0, the settings **Task ID**, **Task description** and **Prefix/Default value** are available for every single task ID.	0 I 1* I 2
Task ID 1	Defines the naming type of the task ID. **Manual with default**: The value of the task ID can be entered manually at method execution time. **Automatic timestamp**: The system provides a value created from a prefix with the current date and time appended.	Manual with default* I Automatic timestamp
Task description	Allows to define a label for each task ID field.	Text (0…32 characters)
Default value	Defines a default value for the task ID. The value of the task ID can be changed manually while executing the method. This setting is only available when the corresponding **Task ID** is set to **Manual with default**.	Text (0…32 characters)
Prefix	Defines a prefix for the task ID. This setting is only available is the corresponding **Task ID** is set to **Automatic timestamp**.	Text (0…32 characters)

* Factory setting

Result IDs

Parameter	Description	Values
Number of result IDs	Defines the number of result IDs. If the **Number of result IDs** is larger than 0, the settings **Result ID**, **Result description** and **Prefix/Default value** are available for every single result ID.	0 I 1* I 2

Result ID 1	Defines the naming type of the result ID. **Manual with default**: The value of the result ID can be entered manually at method execution time. **Automatic counter**: The system provides a value created from a **Prefix** to which is appended a unique number (counter).	Manual with default* I Automatic counter
Result description	Allows to define a label for each result ID.	Text (0...32 characters)
Default value	Defines a default value for the result ID. The value of the result ID can be changed manually while executing the method. This setting is only available when the corresponding **Result ID** is set to **Manual with default**.	Text (0...32 characters)
Prefix	Defines a prefix for the result ID. This setting is only available if the corresponding **Result ID** is set to **Automatic counter**.	Text (0...32 characters)

* Factory setting

6.2.2.4 Weighing

Weighing settings

Parameter	Description	Values
Tolerance profile	A tolerance profile stores all the necessary balance settings needed for a certain weighing method. It is possible to create different tolerance profiles for different weighing methods.	Tolerance profiles are created by the user for specific balances and applications.

Electrostatic

Parameter	Description	Values
Ionizer	Defines whether the ionizer is activated/deactivated.	Active I Inactive*

* Factory setting

See also

Creating a method "Simple formulation" ▸ Page 36

6.2.2.5 Weighing item

A target weight with tolerance limits can be defined for the method. The method **Simple formulation** includes a single item in **Weighing item**, whereas several items can be defined for the method **Simple formulation (itemized)** in **Weighing items**.

Initial values for weighing

Parameter	Description	Values
Molar mass	Defines the molar mass of the component. The molar mass of an ion is calculated by adding the atomic weight of the individual atoms the ion is composed of. This setting is available if **Calculate amount of component** is set to **Active** or if the **Concentration unit** is expressed in molar concentration.	Numeric (1…10000 g/mol)
Purity	To define the purity of the component. This setting is only available if **Calculate concentration per component** or **Calculate amount of component** is set to **Active**.	Numeric (100%* I 0.001...100%)
Unit	Defines the unit of the weighing result.	The available units depend on the balance model.

Target weight	Defines the target weight. The target weight will be shown in the weighing-in aid of the balance (SmartTrac). When a target weight including tolerances is defined, the SmartTrac indicates if the current display weight is in tolerance or not.	Numeric
-Tolerance	Defines the lower tolerance limit. This setting is only available if a **Target weight** is defined.	Numeric
+Tolerance	Defines the upper tolerance limit. This setting is only available if a **Target weight** is defined.	Numeric

* Factory setting

See also

Creating a method "Simple formulation" ▸ Page 36

6.2.2.6 Weighing items

This section is only available for the method **Simple formulation (itemized)**.

Parameter	Description	Values
Component ID	Defines the name of the component.	Text (0...32 characters)
Molar mass	Defines the molar mass of the component. The molar mass of an ion is calculated by adding the atomic weight of the individual atoms the ion is composed of. This setting is available if **Calculate amount of component** is set to **Active** or if the **Concentration unit** is expressed in molar concentration.	Numeric (1…10000 g/mol)
Purity	To define the purity of the component. This setting is only available if **Calculate concentration per component** or **Calculate amount of component** is set to **Active**.	Numeric (100%* I 0.001...100%)
Unit	Defines the unit of the weighing result.	The available units depend on the balance model.
Target weight	Defines the target weight of the component. If **Calculate target** is set to **Target concentration**, the **Target weight** is calculated and cannot be edited manually.	Numeric
Target concen-tration	Defines the target concentration of the component. This setting is only available if **Calculate target** is set to **Target concentration**.	Numeric (0% I 0.001...100%)
-Tolerance	Defines the lower tolerance limit. This setting is only available if a **Target weight** or **Target concen-tration** is defined.	Numeric
+Tolerance	Defines the upper tolerance limit. This setting is only available if a **Target weight** or **Target concen-tration** is defined.	Numeric

* Factory setting

See also

Creating a method "Simple formulation" ▸ Page 36
Using methods with multiple weighing items (itemized) ▸ Page 42

6.2.2.7 Automation

Parameter	Description	Values
Barcode data target	If a barcode reader is connected to the balance, this option defines how the data is to be processed. **Keyboard Input**: The data is written in the currently open input window. If no input window is open, the data is ignored. **Target weight value**: The barcode data is interpreted as a value for the target weight. **Task ID 1**: The received barcode data is treated as identification text for this task ID. **Result ID 1**: The received barcode data is treated as identification text for this result ID. The available items in the drop-down menu depend on the **Number of task IDs** and **Number of result IDs** specified for the method. Make sure that the characters of the scanned barcode are compatible with the format of the field where they should be inserted.	Keyboard Input* I Target weight value I Task ID 1 I Result ID 1 I ...

* Factory setting

Weighing automation

Parameter	Description	Values
Automatic zero	**Active**: the balance is automatically zeroed when the weight falls below a predefined threshold. This setting is not available for approved balances.	Active I Inactive*
Automatic zero threshold	Defines the threshold of the **Automatic zero**. This setting is only available if **Automatic zero** is set to **Active**.	Numeric
Tare Mode	Defines the tare mode. **None**: No automatic tare. **Automatic tare**: The balance stores automatically the first stable weight as the tare weight. **Preset tare**: Allows you to enter manually a numerical entry of a fixed tare weight.	None* I Automatic tare I Preset tare
Automatic tare threshold	Defines the threshold of the option **Tare Mode**. This value defines the minimum weight that must be applied to the weighing pan so that it is automatically stored as the tare weight. If the weight is below the limits, it is not automatically transferred to the tare memory. Instead of entering the weight, the lightest tare container can be placed on the weighing pan and the button subsequently pressed. The applied weight is directly taken over as a limit. This setting is only available if **Tare Mode** is set to **Automatic tare**.	Numeric
Preset tare value	Defines a weight value for the pretare function. Instead of entering the value, the respective tare container can be placed on the weighing pan and the button subsequently pressed. The weight is directly taken over as pretare value. This setting is only available if **Tare Mode** is set to **Preset tare**.	Numeric
Automatic tare after result	If set to **Active**, the balance is automatically tared when a result is added to the **Results list**.	Active I Inactive*

Automatic task completion	**Active**: the balance automatically completes a running task after the result of the last weighing item has been added to the **Results list**. This setting is only available if the method is using multiple weighing items.	Active I Inactive*

* Factory setting

See also

Creating a method "Simple formulation" ▸ Page 36

6.2.2.8 Print / Export

Parameter	Description	Values
Strip printout and data export	Defines the content of the printout and/or export, as well as which printing/exporting actions are performed automatically when the task is complete. This section contains several settings that are described in the table **Strip printout and data export** below.	
Label printout for task	Defines the template of the task label to be printed, i.e., which data is included on the label and in which format. This section contains several settings that are described in the table **Label printout for task** below.	
Label printout for weighing item	Defines the template of the weighing item label to be printed, i.e., which data is included on the label and in which format. This section contains several settings that are described in the table **Label printout for weighing item** below.	
Label cutting	Defines if the labels should be cut after printing. **Per label**: Each label is cut once printed. **Per task**: The labels are cut when the task is complete. This setting is only relevant if the connected label printer can cut labels.	Off* I Per label I Per task

* Factory setting

6.2.2.8.1 Strip printout and data export

Automatic data output

Parameter	Description	Values
Strip printer	Activates/Deactivates automatic printing of the **Results list** on a strip printer when the **Complete** button is tapped. The data to be transmitted to the printer can be defined in the section **Template settings**.	Active I Inactive*
Results export	Activates/Deactivates the automatic data export to a USB storage device when the **Complete** button is tapped.	Active I Inactive*
Weight value	Activates/Deactivates the option to automatically send the weighing value over USB or Ethernet when tapping **Add result**.	Active I Inactive*

* Factory setting

Strip printout template

This menu item can be used to define which information is printed by the strip printer.

Each individual parameter can be set to **Inactive** or **Active** via the corresponding check box. To enable or disable all parameters at once, proceed as follows:

1 To disable all check boxes at once, tap ⧉ **Deselect all**.

➡ All parameters are set to **Inactive**.

2 To enable all check boxes at once, tap **Select all**.

➡ All parameters are set to **Active**.

Template settings

Parameter	Description	Values
Header and Footer	Defines the header and/or footer to be printed.	Title I Title text I Date/ time I User I Signature I Separating lines I Group titles
Balance information	Defines which information about the balance is printed.	Balance type I Balance ID I Balance serial number I Software version
Quality information	Defines which quality information is printed.	Tolerance profile I Adjustment date/time I Routine test name I Routine test last execution date I Routine test result I GWP Approved state I Level state I MinWeigh state
Task information	Defines which information about the task is printed.	Method name I Method comment I Task ID I Flask volume I Reference weight I Expiry date I Production date
Weighing item information	Defines which information about the weighing items is printed.	Show excluded weighing items I Result state I Result IDs I Molar mass I Purity IAmount of substance I Concentration I GWP Approved state I Level state I MinWeigh state I Tolerance state I Target and tolerances
Result detail information	Defines which information related to the result of the measurement is printed.	Weight I Tare weight I Gross weight I Info weight I Date/time I Stability

6.2.2.8.2 Label printout for task

Parameter	Description	Values
Automatic label printout for task	When set to **Active**, the task label is automatically printed when tapping **Complete**.	Active I Inactive*
Copies	Defines how many copies of the label are printed.	Numeric
Used template	Chooses the label template.	Available labels are shown below.

* Factory setting

Field settings

The content of each label field can be defined individually.

Parameter	Description	Values
Label field 1	Defines which information appears in each label field. The number of label fields depends on the selected template.	Available entries depend on the method settings.

Barcode settings

The content of each barcode field can be defined individually. This section is only available when the selected **Used template** contains at least one 2D code.

Parameter	Description	Values
Delimiter	Defines the delimiter between the barcode entries. This setting is only available when the selected **Used template** contains several 2D codes.	TAB* I Form feed I Carriage return I Space I User defined
Barcode field 1	Defines which information appears in each barcode. The number of the barcode fields depends on the selected template.	Available entries depend on the method settings.

* Factory setting

6.2.2.8.3 Label printout for weighing item

Parameter	Description	Values
Automatic label printout for weighing item	When set to **Active**, the weighing item label is automatically printed when tapping **Add result**.	Active I Inactive*
Copies	Defines how many copies of the label are printed.	Numeric
Used template	Chooses the label template.	Available labels are shown below.

* Factory setting

Field settings

The content of each label field can be defined individually.

Parameter	Description	Values
Label field 1	Defines which information appears in each label field. The number of label fields depends on the selected template.	Available entries depend on the method settings.

Barcode settings

The content of each barcode field can be defined individually. This section is only available when the selected **Used template** contains at least one 2D code.

Parameter	Description	Values
Delimiter	Defines the delimiter between the barcode entries. This setting is only available when the selected **Used template** contains several 2D codes.	TAB* I Form feed I Carriage return I Space I User defined
Barcode field 1	Defines which information appears in each barcode. The number of the barcode fields depends on the selected template.	Available entries depend on the method settings.

* Factory setting

6.2.2.8.4 Available labels

The following label layouts can be selected:

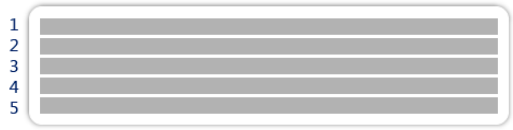 5 large fields	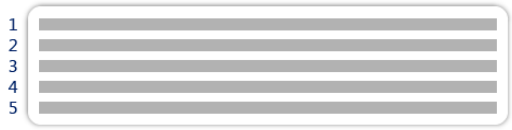 5 small fields
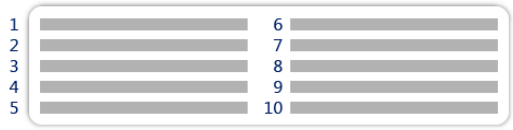 10 small fields	 1D barcode with 3 large fields
 1D barcode with 3 small fields	 1D barcode with 6 small fields
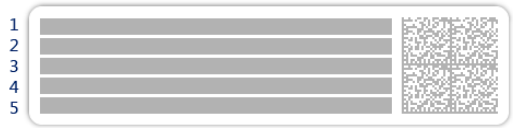 2D barcode with 5 large fields	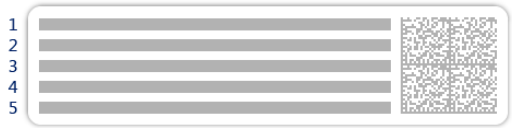 2D barcode with 5 small fields
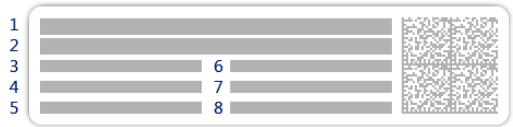 2D barcode with 2 large fields and 6 small fields	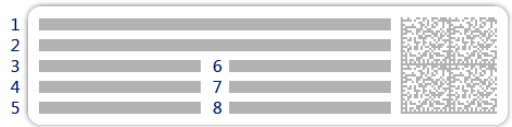 2D barcode with 8 small fields

6.2.3 Settings: method "Piece Counting"

Navigation: Methods > Methods list > my piece counting > Edit

The settings of the method **Piece Counting** are grouped as follows:

- **General**
- **ID format**
- **Weighing**
- **Weighing item**
- **Automation**
- **Print / Export**

See also

Creating a method "Piece Counting" ▸ Page 37
Editing a method ▸ Page 41

6.2.3.1 General

The **Method type** is defined in the wizard while creating the method and cannot be changed.

Parameter	Description	Values
Method name	Defines the name of the method.	Text (1…22 characters)
Comment	The method can be described with a comment.	Text (0…128 characters)
Lock method	Locks the method to prevent further editing.	Active I Inactive*

* Factory setting

6.2.3.2 ID format

Task IDs

Parameter	Description	Values
Number of task IDs	Defines the number of task IDs. If the **Number of task IDs** is larger than 0, the settings **Task ID**, **Task description** and **Prefix/Default value** are available for every single task ID.	0 I 1* I 2
Task ID 1	Defines the naming type of the task ID. **Manual with default**: The value of the task ID can be entered manually at method execution time. **Automatic timestamp**: The system provides a value created from a prefix with the current date and time appended.	Manual with default* I Automatic timestamp
Task description	Allows to define a label for each task ID field.	Text (0…32 characters)
Default value	Defines a default value for the task ID. The value of the task ID can be changed manually while executing the method. This setting is only available when the corresponding **Task ID** is set to **Manual with default**.	Text (0…32 characters)
Prefix	Defines a prefix for the task ID. This setting is only available is the corresponding **Task ID** is set to **Automatic timestamp**.	Text (0…32 characters)

* Factory setting

Result IDs

Parameter	Description	Values
Number of result IDs	Defines the number of result IDs. If the **Number of result IDs** is larger than 0, the settings **Result ID**, **Result description** and **Prefix/Default value** are available for every single result ID.	0 I 1* I 2
Result ID 1	Defines the naming type of the result ID. **Manual with default**: The value of the result ID can be entered manually at method execution time. **Automatic counter**: The system provides a value created from a **Prefix** to which is appended a unique number (counter).	Manual with default* I Automatic counter
Result description	Allows to define a label for each result ID.	Text (0...32 characters)
Default value	Defines a default value for the result ID. The value of the result ID can be changed manually while executing the method. This setting is only available when the corresponding **Result ID** is set to **Manual with default**.	Text (0...32 characters)
Prefix	Defines a prefix for the result ID. This setting is only available if the corresponding **Result ID** is set to **Automatic counter**.	Text (0...32 characters)

* Factory setting

6.2.3.3 Weighing

Weighing settings

Parameter	Description	Values
Tolerance profile	A tolerance profile stores all the necessary balance settings needed for a certain weighing method. It is possible to create different tolerance profiles for different weighing methods.	Tolerance profiles are created by the user for specific balances and applications.
Weight capture mode	Defines the behavior when the button to add the result was tapped or the add result was triggered by the automatic weighing result creation. **Stable**: The system waits for a stable weight. **Immediate**: The system doesn't wait for a stable weight. The system waits for the defined amount of seconds (**Weight capture delay**). After the weight capture delay, the weight value from the weight stream is captured.	Stable* I Immediate
Weight capture delay	Defines the time in seconds the balance waits for capturing the weight after the button to add the result was tapped or the add result was triggered by the automatic weighing result creation. This setting is only available if **Weight capture mode** is set to **Immediate**.	Numeric (5 seconds* I 0...60 seconds)

* Factory setting

Statistics

Parameter	Description	Values
Activate statistics	If **Activate statistics** is set to **Active**, the following statistics will be calculated: **Count**: Number of items used for the statistics **Sum**: sum of all value (decimal places and unit according to the method settings) **Minimum**: smallest value (decimal places and unit according to the method settings) **Maximum**: largest value (decimal places and unit according to the method setting) **Range**: difference between the largest and smallest values (decimal places and unit according to the method settings) **Average**: The values are summed up and divided by the number of values, rounded to 1 digit more than the configured decimal places in the associated tolerance profile (unit according to the method settings). **Standard deviation**: standard deviation rounded to 1 digit more than the configured decimal places in the associated tolerance profile (unit according to the method settings) **Relative standard deviation**: relative standard deviation (rounded to 2 decimal places, in %) The statistical values are calculated and displayed as soon as a result is added or updated.	Active I Inactive*

* Factory setting

6.2.3.4 Weighing item

Initial values for weighing

Parameter	Description	Values
Reference PCS	Defines the number of items used to determine the average weight per item.	Numeric (1* I 1… 10000)
Reference average weight	Defines the average weight for one piece. The average weight of one piece serves as basis for the piece counting. During task execution, the balance calculates the actual number of pieces on the weighing pan based on the measured weight and the average weight of one piece.	Numeric
Target weight	Defines the target weight. The target weight will be shown in the weighing-in aid of the balance (SmartTrac). When a target weight including tolerances is defined, the SmartTrac indicates if the current display weight is in tolerance or not.	Numeric
-Tolerance	Defines the lower tolerance limit. This setting is only available if a **Target weight** is defined.	Numeric
+Tolerance	Defines the upper tolerance limit. This setting is only available if a **Target weight** is defined.	Numeric

* Factory setting

See also

Creating a method "Piece Counting" ▸ Page 37

6.2.3.5 Automation

Parameter	Description	Values
Barcode data target	If a barcode reader is connected to the balance, this option defines how the data is to be processed. **Keyboard Input**: The data is written in the currently open input window. If no input window is open, the data is ignored. **Target weight value**: The barcode data is interpreted as a value for the target weight. **Task ID 1**: The received barcode data is treated as identification text for this task ID. **Result ID 1**: The received barcode data is treated as identification text for this result ID. The available items in the drop-down menu depend on the **Number of task IDs** and **Number of result IDs** specified for the method. Make sure that the characters of the scanned barcode are compatible with the format of the field where they should be inserted.	Keyboard Input* I Target weight value I Task ID 1 I Result ID 1 I ...

* Factory setting

Weighing automation

Parameter	Description	Values
Automatic zero	**Active**: the balance is automatically zeroed when the weight falls below a predefined threshold. This setting is not available for approved balances.	Active I Inactive*
Automatic zero threshold	Defines the threshold of the **Automatic zero**. This setting is only available if **Automatic zero** is set to **Active**.	Numeric
Tare Mode	Defines the tare mode. **None**: No automatic tare. **Automatic tare**: The balance stores automatically the first stable weight as the tare weight. **Preset tare**: Allows you to enter manually a numerical entry of a fixed tare weight.	None* I Automatic tare I Preset tare
Automatic tare threshold	Defines the threshold of the option **Tare Mode**. This value defines the minimum weight that must be applied to the weighing pan so that it is automatically stored as the tare weight. If the weight is below the limits, it is not automatically transferred to the tare memory. Instead of entering the weight, the lightest tare container can be placed on the weighing pan and the button subsequently pressed. The applied weight is directly taken over as a limit. This setting is only available if **Tare Mode** is set to **Automatic tare**.	Numeric
Preset tare value	Defines a weight value for the pretare function. Instead of entering the value, the respective tare container can be placed on the weighing pan and the button subsequently pressed. The weight is directly taken over as pretare value. This setting is only available if **Tare Mode** is set to **Preset tare**.	Numeric

Automatic result	Automatically generates a weighing result after a threshold is reached. **None**: No automatic result will be generated. **Without sample tare**: After a weight value that reached the threshold is being removed from the weighing pan, the balance is not being tared.	None* I Without sample tare
Automatic result threshold	Defines the threshold of the **Automatic result**. The result is automatically added to the **Results list** only if the weight of the sample is larger than the defined threshold. This setting is only available if **Automatic result** is set to **Active**.	Numeric
Weight trigger	Defines the behaviour of the **Automatic result threshold**. **Exceeding**: The weighing result is generated when the weight exceeds the defined threshold. **Falling below**: The weighing result is generated when the weight falls below the defined threshold. This setting is only available if **Automatic result** is set to **Without sample tare**.	Exceeding* I Falling below
Automatic tare after result	If set to **Active**, the balance is automatically tared when a result is added to the **Results list**.	Active I Inactive*

* Factory setting

When using **Automatic result**, make sure that the **Reference average weight** of one piece is larger than the **Automatic result threshold**.

See also

Creating a method "Piece Counting" ▸ Page 37

6.2.3.6 Print / Export

Parameter	Description	Values
Strip printout and data export	Defines the content of the printout and/or export, as well as which printing/exporting actions are performed automatically when the task is complete. This section contains several settings that are described in the table **Strip printout and data export** below.	
Label printout for task	Defines the template of the task label to be printed, i.e., which data is included on the label and in which format. This section contains several settings that are described in the table **Label printout for task** below.	
Label printout for weighing item	Defines the template of the weighing item label to be printed, i.e., which data is included on the label and in which format. This section contains several settings that are described in the table **Label printout for weighing item** below.	
Label cutting	Defines if the labels should be cut after printing. **Per label**: Each label is cut once printed. **Per task**: The labels are cut when the task is complete. This setting is only relevant if the connected label printer can cut labels.	Off* I Per label I Per task

* Factory setting

6.2.3.6.1 Strip printout and data export

Automatic data output

Parameter	Description	Values
Strip printer	Activates/Deactivates automatic printing of the **Results list** on a strip printer when the **Complete** button is tapped. The data to be transmitted to the printer can be defined in the section **Template settings**.	Active I Inactive*
Results export	Activates/Deactivates the automatic data export to a USB storage device when the **Complete** button is tapped.	Active I Inactive*
Weight value	Activates/Deactivates the option to automatically send the weighing value over USB or Ethernet when tapping **Add result**.	Active I Inactive*

* Factory setting

Strip printout template

This menu item can be used to define which information is printed by the strip printer.

Each individual parameter can be set to **Inactive** or **Active** via the corresponding check box. To enable or disable all parameters at once, proceed as follows:

1 To disable all check boxes at once, tap **Deselect all**.
   ➡ All parameters are set to **Inactive**.
2 To enable all check boxes at once, tap **Select all**.
   ➡ All parameters are set to **Active**.

Template settings

Parameter	Description	Values
Header and Footer	Defines the header and/or footer to be printed.	Title I Title text I Date/ time I User I Signature I Separating lines I Group titles
Balance information	Defines which information about the balance is printed.	Balance type I Balance ID I Balance serial number I Software version
Quality information	Defines which quality information is printed.	Tolerance profile I Adjustment date/time I Routine test name I Routine test last execution date I Routine test result I GWP Approved state I Level state I MinWeigh state
Task information	Defines which information about the task is printed.	Method name I Method comment I Task IDs I Automatic result settingsI Count I Sum I Average I Minimum I Maximum I Standard deviation I Relative standard deviation I PCS below -Tolerance I PCS above +Tolerance

Weighing item information	Defines which information about the weighing items is printed.	Show excluded weighing items I Result state I Result IDs I GWP Approved state I Level state I MinWeigh state I Tolerance state I Target and tolerances I Reference PCS I Reference average weight
Result detail information	Defines which information related to the result of the measurement is printed.	Weight I Tare weight I Gross weight I Info weight I Date/time I Stability

6.2.3.6.2 Label printout for task

Parameter	Description	Values
Automatic label printout for task	When set to **Active**, the task label is automatically printed when tapping **Complete**.	Active I Inactive*
Copies	Defines how many copies of the label are printed.	Numeric
Used template	Chooses the label template.	Available labels are shown below.

* Factory setting

Field settings

The content of each label field can be defined individually.

Parameter	Description	Values
Label field 1	Defines which information appears in each label field. The number of label fields depends on the selected template.	Available entries depend on the method settings.

Barcode settings

The content of each barcode field can be defined individually. This section is only available when the selected **Used template** contains at least one 2D code.

Parameter	Description	Values
Delimiter	Defines the delimiter between the barcode entries. This setting is only available when the selected **Used template** contains several 2D codes.	TAB* I Form feed I Carriage return I Space I User defined
Barcode field 1	Defines which information appears in each barcode. The number of the barcode fields depends on the selected template.	Available entries depend on the method settings.

* Factory setting

6.2.3.6.3 Label printout for weighing item

Parameter	Description	Values
Automatic label printout for weighing item	When set to **Active**, the weighing item label is automatically printed when tapping **Add result**.	Active I Inactive*
Copies	Defines how many copies of the label are printed.	Numeric
Used template	Chooses the label template.	Available labels are shown below.

* Factory setting

Field settings

The content of each label field can be defined individually.

Parameter	Description	Values
Label field 1	Defines which information appears in each label field. The number of label fields depends on the selected template.	Available entries depend on the method settings.

Barcode settings

The content of each barcode field can be defined individually. This section is only available when the selected **Used template** contains at least one 2D code.

Parameter	Description	Values
Delimiter	Defines the delimiter between the barcode entries. This setting is only available when the selected **Used template** contains several 2D codes.	TAB* I Form feed I Carriage return I Space I User defined
Barcode field 1	Defines which information appears in each barcode. The number of the barcode fields depends on the selected template.	Available entries depend on the method settings.

* Factory setting

6.2.3.6.4 Available labels

The following label layouts can be selected:

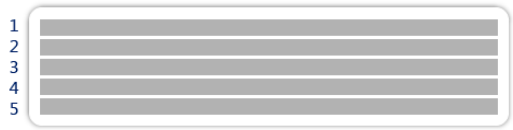 5 large fields	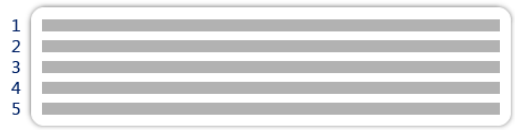 5 small fields
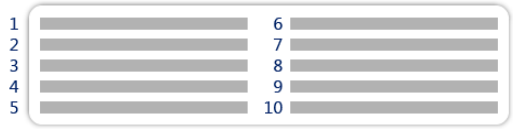 10 small fields	 1D barcode with 3 large fields
 1D barcode with 3 small fields	 1D barcode with 6 small fields
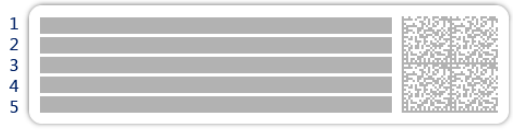 2D barcode with 5 large fields	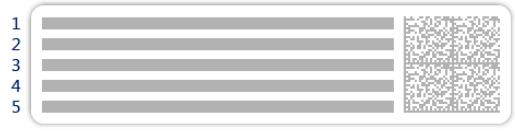 2D barcode with 5 small fields

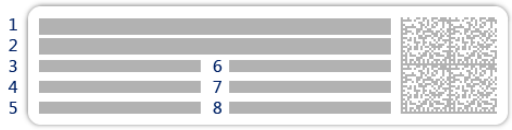 2D barcode with 2 large fields and 6 small fields	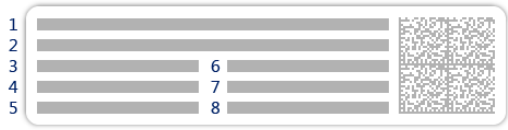 2D barcode with 8 small fields

6.2.4 Settings: method "Titration"

Navigation: Methods > Methods list > my titration > Edit

The settings of the method **Titration** are grouped as follows:

- **General**
- **ID format**
- **Weighing**
- **Weighing item**
- **Automation**
- **Print / Export**

See also

Creating a method "Titration" ▸ Page 39

Editing a method ▸ Page 41

6.2.4.1 General

The **Method type** is defined in the wizard while creating the method and cannot be changed.

Parameter	Description	Values
Method name	Defines the name of the method.	Text (1…22 characters)
Comment	The method can be described with a comment.	Text (0…128 characters)
Lock method	Locks the method to prevent further editing.	Active I Inactive*

* Factory setting

6.2.4.2 ID format

Task IDs

Parameter	Description	Values
Number of task IDs	Defines the number of task IDs. If the **Number of task IDs** is larger than 0, the settings **Task ID**, **Task description** and **Prefix/Default value** are available for every single task ID.	0 I 1* I 2
Task ID 1	Defines the naming type of the task ID. **Manual with default**: The value of the task ID can be entered manually at method execution time. **Automatic timestamp**: The system provides a value created from a prefix with the current date and time appended.	Manual with default* I Automatic timestamp
Task description	Allows to define a label for each task ID field.	Text (0...32 characters)
Default value	Defines a default value for the task ID. The value of the task ID can be changed manually while executing the method. This setting is only available when the corresponding **Task ID** is set to **Manual with default**.	Text (0...32 characters)
Prefix	Defines a prefix for the task ID. This setting is only available is the corresponding **Task ID** is set to **Automatic timestamp**.	Text (0...32 characters)

* Factory setting

Result IDs

Parameter	Description	Values
Number of result IDs	Defines the number of result IDs. If the **Number of result IDs** is larger than 0, the settings **Result ID**, **Result description** and **Prefix/Default value** are available for every single result ID.	0 I 1* I 2
Result ID 1	Defines the naming type of the result ID. **Manual with default**: The value of the result ID can be entered manually at method execution time. **Automatic counter**: The system provides a value created from a **Prefix** to which is appended a unique number (counter).	Manual with default* I Automatic counter
Result description	Allows to define a label for each result ID.	Text (0...32 characters)
Default value	Defines a default value for the result ID. The value of the result ID can be changed manually while executing the method. This setting is only available when the corresponding **Result ID** is set to **Manual with default**.	Text (0...32 characters)
Prefix	Defines a prefix for the result ID. This setting is only available if the corresponding **Result ID** is set to **Automatic counter**.	Text (0...32 characters)

* Factory setting

6.2.4.3 Weighing

Weighing settings

Parameter	Description	Values
Tolerance profile	A tolerance profile stores all the necessary balance settings needed for a certain weighing method. It is possible to create different tolerance profiles for different weighing methods.	Tolerance profiles are created by the user for specific balances and applications.
Weight capture mode	Defines the behavior when the button to add the result was tapped or the add result was triggered by the automatic weighing result creation. **Stable**: The system waits for a stable weight. **Immediate**: The system doesn't wait for a stable weight. The system waits for the defined amount of seconds (**Weight capture delay**). After the weight capture delay, the weight value from the weight stream is captured.	Stable* I Immediate
Weight capture delay	Defines the time in seconds the balance waits for capturing the weight after the button to add the result was tapped or the add result was triggered by the automatic weighing result creation. This setting is only available if **Weight capture mode** is set to **Immediate**.	Numeric (5 seconds* I 0...60 seconds)

* Factory setting

Electrostatic

Parameter	Description	Values
Ionizer	Defines whether the ionizer is activated/deactivated.	Active I Inactive*

* Factory setting

See also

Creating a method "Titration" ▸ Page 39

6.2.4.4 Weighing item

Initial values for weighing

Parameter	Description	Values
Unit	Defines the unit of the weighing result.	The available units depend on the balance model.
Target weight	Defines the target weight. The target weight will be shown in the weighing-in aid of the balance (SmartTrac). When a target weight including tolerances is defined, the SmartTrac indicates if the current display weight is in tolerance or not.	Numeric
-Tolerance	Defines the lower tolerance limit. This setting is only available if a **Target weight** is defined.	Numeric
+Tolerance	Defines the upper tolerance limit. This setting is only available if a **Target weight** is defined.	Numeric

6.2.4.5 Automation

Parameter	Description	Values
Barcode data target	If a barcode reader is connected to the balance, this option defines how the data is to be processed. **Keyboard Input**: The data is written in the currently open input window. If no input window is open, the data is ignored. **Target weight value**: The barcode data is interpreted as a value for the target weight. **Task ID 1**: The received barcode data is treated as identification text for this task ID. **Result ID 1**: The received barcode data is treated as identification text for this result ID. The available items in the drop-down menu depend on the **Number of task IDs** and **Number of result IDs** specified for the method. Make sure that the characters of the scanned barcode are compatible with the format of the field where they should be inserted.	Keyboard Input* I Target weight value I Task ID 1 I Result ID 1 I ...

* Factory setting

Weighing automation

Parameter	Description	Values
Automatic zero	**Active**: the balance is automatically zeroed when the weight falls below a predefined threshold. This setting is not available for approved balances.	Active I Inactive*
Automatic zero threshold	Defines the threshold of the **Automatic zero**. This setting is only available if **Automatic zero** is set to **Active**.	Numeric
Tare Mode	Defines the tare mode. **None**: No automatic tare. **Automatic tare**: The balance stores automatically the first stable weight as the tare weight. **Preset tare**: Allows you to enter manually a numerical entry of a fixed tare weight.	None* I Automatic tare I Preset tare
Automatic tare threshold	Defines the threshold of the option **Tare Mode**. This value defines the minimum weight that must be applied to the weighing pan so that it is automatically stored as the tare weight. If the weight is below the limits, it is not automatically transferred to the tare memory. Instead of entering the weight, the lightest tare container can be placed on the weighing pan and the button subsequently pressed. The applied weight is directly taken over as a limit. This setting is only available if **Tare Mode** is set to **Automatic tare**.	Numeric
Preset tare value	Defines a weight value for the pretare function. Instead of entering the value, the respective tare container can be placed on the weighing pan and the button subsequently pressed. The weight is directly taken over as pretare value. This setting is only available if **Tare Mode** is set to **Preset tare**.	Numeric

Automatic result	Automatically generates a weighing result after a threshold is reached. **None**: No automatic result will be generated. **Without sample tare**: After a weight value that reached the threshold is being removed from the weighing pan, the balance is not being tared.	None* I Without sample tare
Automatic result threshold	Defines the threshold of the **Automatic result**. The result is automatically added to the **Results list** only if the weight of the sample is larger than the defined threshold. This setting is only available if **Automatic result** is set to **Active**.	Numeric
Weight trigger	Defines the behaviour of the **Automatic result threshold**. **Exceeding**: The weighing result is generated when the weight exceeds the defined threshold. **Falling below**: The weighing result is generated when the weight falls below the defined threshold. This setting is only available if **Automatic result** is set to **Without sample tare**.	Exceeding* I Falling below
Automatic tare after result	If set to **Active**, the balance is automatically tared when a result is added to the **Results list**.	Active I Inactive*

* Factory setting

See also

Creating a method "Titration" ▸ Page 39

6.2.4.6 Print / Export

Parameter	Description	Values
Strip printout and data export	Defines the content of the printout and/or export, as well as which printing/exporting actions are performed automatically when the task is complete. This section contains several settings that are described in the table **Strip printout and data export** below.	
Label printout for task	Defines the template of the task label to be printed, i.e., which data is included on the label and in which format. This section contains several settings that are described in the table **Label printout for task** below.	
Label printout for weighing item	Defines the template of the weighing item label to be printed, i.e., which data is included on the label and in which format. This section contains several settings that are described in the table **Label printout for weighing item** below.	
Label cutting	Defines if the labels should be cut after printing. **Per label**: Each label is cut once printed. **Per task**: The labels are cut when the task is complete. This setting is only relevant if the connected label printer can cut labels.	Off* I Per label I Per task

* Factory setting

6.2.4.6.1 Strip printout and data export

Automatic data output

Parameter	Description	Values
Strip printer	Activates/Deactivates automatic printing of the **Results list** on a strip printer when the **Complete** button is tapped. The data to be transmitted to the printer can be defined in the section **Template settings**.	Active I Inactive*
Results export	Activates/Deactivates the automatic data export to a USB storage device when the **Complete** button is tapped.	Active I Inactive*
Weight value	Activates/Deactivates the option to automatically send the weighing value over USB or Ethernet when tapping **Add result**.	Active I Inactive*

* Factory setting

Strip printout template

This menu item can be used to define which information is printed by the strip printer.

Each individual parameter can be set to **Inactive** or **Active** via the corresponding check box. To enable or disable all parameters at once, proceed as follows:

1 To disable all check boxes at once, tap **Deselect all**.
   ➡ All parameters are set to **Inactive**.
2 To enable all check boxes at once, tap **Select all**.
   ➡ All parameters are set to **Active**.

Template settings

Parameter	Description	Values
Header and Footer	Defines the header and/or footer to be printed.	Title I Title text I Date/time I User I Signature I Separating lines I Group titles
Balance information	Defines which information about the balance is printed.	Balance type I Balance ID I Balance serial number I Software version
Quality information	Defines which quality information is printed.	Tolerance profile I Adjustment date/time I Routine test name I Routine test last execution date I Routine test result I GWP Approved state I Level state I MinWeigh state
Task information	Defines which information about the task is printed.	Method name I Method comment I Task IDs I Automatic result settings
Weighing item information	Defines which information about the weighing items is printed.	Show excluded weighing items I Result state I Result IDs I Density I Correction factor I GWP Approved state I Level state I MinWeigh state I Tolerance state I Target and tolerances

Result detail information	Defines which information related to the result of the measurement is printed.	Weight I Tare weight I Gross weight I Info weight I Date/time I Stability

6.2.4.6.2 Label printout for task

Parameter	Description	Values
Automatic label printout for task	When set to **Active**, the task label is automatically printed when tapping **Complete**.	Active I Inactive*
Copies	Defines how many copies of the label are printed.	Numeric
Used template	Chooses the label template.	Available labels are shown below.

* Factory setting

Field settings

The content of each label field can be defined individually.

Parameter	Description	Values
Label field 1	Defines which information appears in each label field. The number of label fields depends on the selected template.	Available entries depend on the method settings.

Barcode settings

The content of each barcode field can be defined individually. This section is only available when the selected **Used template** contains at least one 2D code.

Parameter	Description	Values
Delimiter	Defines the delimiter between the barcode entries. This setting is only available when the selected **Used template** contains several 2D codes.	TAB* I Form feed I Carriage return I Space I User defined
Barcode field 1	Defines which information appears in each barcode. The number of the barcode fields depends on the selected template.	Available entries depend on the method settings.

* Factory setting

6.2.4.6.3 Label printout for weighing item

Parameter	Description	Values
Automatic label printout for weighing item	When set to **Active**, the weighing item label is automatically printed when tapping **Add result**.	Active I Inactive*
Copies	Defines how many copies of the label are printed.	Numeric
Used template	Chooses the label template.	Available labels are shown below.

* Factory setting

Field settings

The content of each label field can be defined individually.

Parameter	Description	Values
Label field 1	Defines which information appears in each label field. The number of label fields depends on the selected template.	Available entries depend on the method settings.

Barcode settings

The content of each barcode field can be defined individually. This section is only available when the selected **Used template** contains at least one 2D code.

Parameter	Description	Values
Delimiter	Defines the delimiter between the barcode entries. This setting is only available when the selected **Used template** contains several 2D codes.	TAB* I Form feed I Carriage return I Space I User defined
Barcode field 1	Defines which information appears in each barcode. The number of the barcode fields depends on the selected template.	Available entries depend on the method settings.

* Factory setting

6.2.4.6.4 Available labels

The following label layouts can be selected:

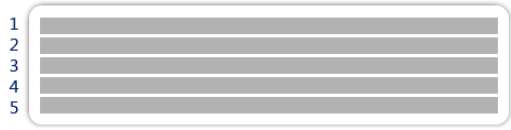 5 large fields	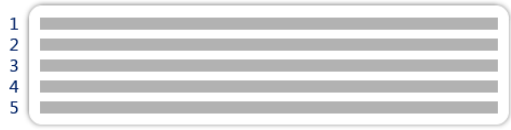 5 small fields
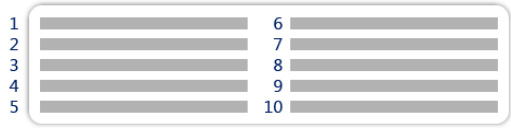 10 small fields	 1D barcode with 3 large fields
 1D barcode with 3 small fields	 1D barcode with 6 small fields
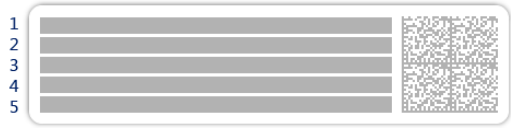 2D barcode with 5 large fields	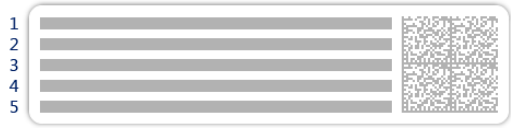 2D barcode with 5 small fields
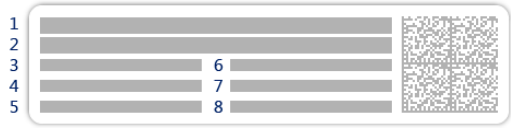 2D barcode with 2 large fields and 6 small fields	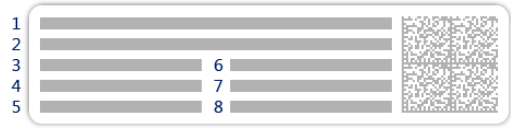 2D barcode with 8 small fields

6.2.5 Settings: method "Density determination"

Navigation: Methods > Methods list > my density > Edit

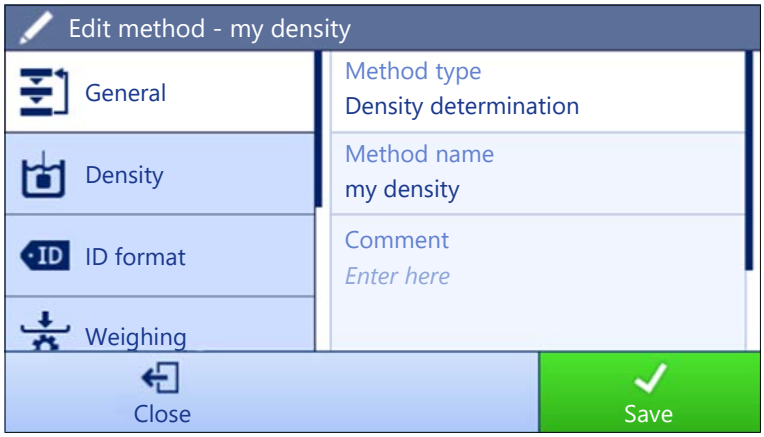

The settings of the method **Density determination** are grouped as follows:

- **General**
- **Density**
- **ID format**
- **Weighing**
- **Weighing item**
- **Automation**
- **Print / Export**

See also

Creating a method "Density determination" ▸ Page 40

Editing a method ▸ Page 41

6.2.5.1 General

The **Method type** is defined in the wizard while creating the method and cannot be changed.

Parameter	Description	Values
Method name	Defines the name of the method.	Text (1…22 characters)
Comment	The method can be described with a comment.	Text (0…128 characters)
Lock method	Locks the method to prevent further editing.	Active I Inactive*

* Factory setting

6.2.5.2 Density

The **Determination type** is defined in the wizard while creating the method and cannot be changed. If another **Determination type** is required, a new method must be created. All settings for all types of **Density determination** are described here.

Parameter	Description	Values
Determination type	Defines the type of density determination measurement. **Liquid (pycnometer)**: Determines the density of a liquid in a glass vessel, such as a pycnometer. **Liquid (sinker)**: Determines the density of a liquid. **Solid**: Determines the density of a solid with the help of a density kit.	Liquid (pycnometer) I Liquid (sinker) I Solid*

Density unit	Defines the unit to be used for density determination. **g/cm3** = grams per cm^3 **kg/m3** = kilograms per m^3 **g/l** = grams per liter	g/cm3* I kg/m3 I g/l
Density value decimal places	Defines the number of decimal places with which the density is displayed and saved.	1 I 2 I 3* I 4 I 5
Air density compensation	Defines the correction factor for force calibration. **Active**: the density determination result is corrected by the force calibration correction factor and mean air density. **Inactive**: no correction is applied.	Active* I Inactive

* Factory setting

See also

Creating a method "Density determination" ▸ Page 40

6.2.5.3 ID format

Task IDs

Parameter	Description	Values
Number of task IDs	Defines the number of task IDs. If the **Number of task IDs** is larger than 0, the settings **Task ID**, **Task description** and **Prefix/Default value** are available for every single task ID.	0 I 1* I 2
Task ID 1	Defines the naming type of the task ID. **Manual with default**: The value of the task ID can be entered manually at method execution time. **Automatic timestamp**: The system provides a value created from a prefix with the current date and time appended.	Manual with default* I Automatic timestamp
Task description	Allows to define a label for each task ID field.	Text (0...32 characters)
Default value	Defines a default value for the task ID. The value of the task ID can be changed manually while executing the method. This setting is only available when the corresponding **Task ID** is set to **Manual with default**.	Text (0...32 characters)
Prefix	Defines a prefix for the task ID. This setting is only available is the corresponding **Task ID** is set to **Automatic timestamp**.	Text (0...32 characters)

* Factory setting

Result IDs

Parameter	Description	Values
Number of result IDs	Defines the number of result IDs. If the **Number of result IDs** is larger than 0, the settings **Result ID**, **Result description** and **Prefix/Default value** are available for every single result ID.	0 I 1* I 2
Result ID 1	Defines the naming type of the result ID. **Manual with default**: The value of the result ID can be entered manually at method execution time. **Automatic counter**: The system provides a value created from a **Prefix** to which is appended a unique number (counter).	Manual with default* I Automatic counter
Result description	Allows to define a label for each result ID.	Text (0...32 characters)

Default value	Defines a default value for the result ID. The value of the result ID can be changed manually while executing the method. This setting is only available when the corresponding **Result ID** is set to **Manual with default**.	Text (0…32 characters)
Prefix	Defines a prefix for the result ID. This setting is only available if the corresponding **Result ID** is set to **Automatic counter**.	Text (0…32 characters)

* Factory setting

6.2.5.4 Weighing

Weighing settings

Parameter	Description	Values
Tolerance profile	A tolerance profile stores all the necessary balance settings needed for a certain weighing method. It is possible to create different tolerance profiles for different weighing methods.	Tolerance profiles are created by the user for specific balances and applications.
Weight capture mode	Defines the behavior when the button to add the result was tapped or the add result was triggered by the automatic weighing result creation. **Stable**: The system waits for a stable weight. **Immediate**: The system doesn't wait for a stable weight. The system waits for the defined amount of seconds (**Weight capture delay**). After the weight capture delay, the weight value from the weight stream is captured.	Stable* I Immediate
Weight capture delay	Defines the time in seconds the balance waits for capturing the weight after the button to add the result was tapped or the add result was triggered by the automatic weighing result creation. This setting is only available if **Weight capture mode** is set to **Immediate**.	Numeric (5 seconds* I 0…60 seconds)

* Factory setting

Statistics

Parameter	Description	Values
Activate statistics	If **Activate statistics** is set to **Active**, the following statistics will be calculated: **Count**: Number of items used for the statistics **Sum**: sum of all value (decimal places and unit according to the method settings) **Minimum**: smallest value (decimal places and unit according to the method settings) **Maximum**: largest value (decimal places and unit according to the method setting) **Range**: difference between the largest and smallest values (decimal places and unit according to the method settings) **Average**: The values are summed up and divided by the number of values, rounded to 1 digit more than the configured decimal places in the associated tolerance profile (unit according to the method settings). **Standard deviation**: standard deviation rounded to 1 digit more than the configured decimal places in the associated tolerance profile (unit according to the method settings) **Relative standard deviation**: relative standard deviation (rounded to 2 decimal places, in %) The statistical values are calculated and displayed as soon as a result is added or updated.	Active I Inactive*

* Factory setting

6.2.5.5 Weighing item

The **Weighing item** settings are different for the three types of **Density determination**. The settings for **Initial values for weighing** are presented separately for each **Determination type**.

Initial values for weighing – Determination type: Solid

Parameter	Description	Values
Unit	Defines the unit of the weighing result.	The available units depend on the balance model.
Temperature	Defines the temperature of the auxiliary liquid (distilled water or custom).	Numeric (10°C...30.9°C)
Aux. liquid	Defines the type of auxiliary liquid used for the determination of the density of a solid.	Distilled water* I Custom
Aux. liquid name	Defines the name of the custom auxiliary liquid. This setting is only available if **Aux. liquid** is set to **Custom**.	Text (0…32 characters)
Aux. liquid density	Defines the density of the custom auxiliary liquid. This setting is only available if **Aux. liquid** is set to **Custom**.	Numeric (0.00001… 100 g/cm3)

* Factory setting

Initial values for weighing – Determination type: Liquid (sinker)

Parameter	Description	Values
Unit	Defines the unit of the weighing result.	The available units depend on the balance model.

Temperature	Defines the temperature of the liquid.	Numeric (10°C...30.9°C)
Sinker volume	Defines the volume of the sinker in cm^3.	Numeric (0.0001...500 cm3)

Initial values for weighing – Determination type: Liquid (pycnometer)

Parameter	Description	Values
Unit	Defines the unit of the weighing result.	The available units depend on the balance model.
Temperature	Defines the temperature of the liquid.	Numeric (10°C...30.9°C)
Pycnometer volume	Defines volume of the pycnometer in cm^3.	Numeric (0.001...10000 cm3)
Pycnometer weight	Defines the weight of the pycnometer.	Numeric

See also

Creating a method "Density determination" ▸ Page 40

6.2.5.6 Automation

Parameter	Description	Values
Barcode data target	If a barcode reader is connected to the balance, this option defines how the data is to be processed. **Keyboard Input**: The data is written in the currently open input window. If no input window is open, the data is ignored. **Task ID 1**: The received barcode data is treated as identification text for this task ID. **Result ID 1**: The received barcode data is treated as identification text for this result ID. The available items in the drop-down menu depend on the **Number of task IDs** and **Number of result IDs** specified for the method. Make sure that the characters of the scanned barcode are compatible with the format of the field where they should be inserted.	Keyboard Input* I Task ID 1 I Result ID 1 I ...

* Factory setting

See also

Creating a method "Density determination" ▸ Page 40

6.2.5.7 Print / Export

Parameter	Description	Values
Strip printout and data export	Defines the content of the printout and/or export, as well as which printing/exporting actions are performed automatically when the task is complete. This section contains several settings that are described in the table **Strip printout and data export** below.	

6.2.5.7.1 Strip printout and data export

Automatic data output

Parameter	Description	Values
Strip printer	Activates/Deactivates automatic printing of the **Results list** on a strip printer when the **Complete** button is tapped. The data to be transmitted to the printer can be defined in the section **Template settings**.	Active I Inactive*
Results export	Activates/Deactivates the automatic data export to a file server or USB storage device when the **Complete** button is tapped.	Active I Inactive*

* Factory setting

Strip printout template

This menu item can be used to define which information is printed by the strip printer.

Each individual parameter can be set to **Inactive** or **Active** via the corresponding check box. To enable or disable all parameters at once, proceed as follows:

1 To disable all check boxes at once, tap **Deselect all**.
   ➡ All parameters are set to **Inactive**.
2 To enable all check boxes at once, tap **Select all**.
   ➡ All parameters are set to **Active**.

Template settings

Parameter	Description	Values
Header and Footer	Defines the header and/or footer to be printed.	Title I Title text I Date/time I User I Signature I Separating lines I Group titles
Balance information	Defines which information about the balance is printed.	Balance type I Balance ID I Balance serial number I Software version
Quality information	Defines which quality information is printed.	Tolerance profile I Adjustment date/time I Routine test name I Routine test last execution date I Routine test result I GWP Approved state I Level state I MinWeigh state
Task information	Defines which information about the task is printed.	Method name I Method comment I Task IDs I Count I Average I Minimum I Maximuml Standard deviation I Relative standard deviation I Type of density determination I Decimal places for density weighing results I Air density compensation

Weighing item information	Defines which information about the weighing items is printed.	Show excluded weighing items I Result state I Result IDs I GWP Approved state I Level state I MinWeigh state I Temperature I Auxiliary liquid name and density I Volume of sample I Weight of sample in air I Weight of sample in liquid
Result detail information	Defines which information related to the result of the measurement is printed.	Weight I Tare weight I Gross weight I Info weight I Date/time I Stability

6.3 Test weights settings

6.3.1 Settings: individual test weight

Navigation: Methods > Tests > Test weights > my weight 1 > Edit

Parameter	Description	Values
Test weight name	Defines the name of the test weight.	Text (1…22 characters)
Test weight ID	Defines the test weight ID.	Text (1…22 characters)
Nominal weight	Defines the approximate, rounded value of the **Actual weight**.	Numeric
Weight class	Defines the weight class according to OIML or ASTM. Alternatively, a customized tolerance class can be created with **Own**.	E1 I E2 I F1 I F2 I M1 I M2 I M3 I ASTM000 I ASTM00 I ASTM0 I ASTM0 I ASTM1 I ASTM2 I ASTM3 I ASTM4 I ASTM5 I ASTM6 I ASTM7 I Own*
Actual weight	Defines the actual weight. The actual weight is a specific weight with a specific Conventional Mass Value (CMV) from the weight calibration certificate.	Numeric
Next calibration date	Defines the next date for calibration.	Date
Certificate	If the certificate of the test weight is available, set to **Active** and fill in the additional information related to the certificate (see below).	Active I Inactive*
Certificate ID	Defines the certificate ID. This setting is only available if **Certificate ID** is set to **Active**.	Text (1…22 characters)
Certificate date	Defines the certificate date. This setting is only available if **Certificate ID** is set to **Active**.	Date
Weight set ID	Defines the weight set ID.	Text (1…22 characters)

* Factory setting

6.3.2 Settings: combined test weight

Navigation: Methods > Tests > Test weights > my weight 1+2 > Edit

Parameter	Description	Values
Test weight name	Defines the name of the test weight.	Text (1…22 characters)

Nominal weight	Shows the sum of the nominal weights of all the individual weights included in this combined weight.	Numeric
Minimum weight class	Defines the minimum weight class according to OIML or ASTM. The customized tolerance class **Own** can also be selected. When choosing the weights that compose the combined weight, only the individual weights with a class better or equal to the selected **Minimum weight class** are shown.	E1 I E2 I F1 I F2 I M1 I M2 I M3 I ASTM000 I ASTM00 I ASTM0 I ASTM0 I ASTM1 I ASTM2 I ASTM3 I ASTM4 I ASTM5 I ASTM6 I ASTM7 I Own*
Weights	Displays a list of the available individual test weights. A total of two or three individual test weights can be selected. Only the individual weights with a class better or equal to the selected **Minimum weight class** are shown.	List of individual test weights

* Factory setting

6.4 Tests settings

6.4.1 Settings: Eccentricity

Navigation: Methods > Tests > my eccentricity test > Edit

1. Name and type

Parameter	Description	Values
Test type	The test type has been pre-defined and cannot be changed in this menu.	Available test types
Name	Defines the name of the test.	Text (1…22 characters)
Test activated	Enables/disables the test.	Active* I Inactive
Show preparation instructions	If activated, a predefined preparatory instruction is displayed in the test sequence.	Active* I Inactive
Automatic print	When activated, the test results are immediately printed on the enabled strip printer after the test result has been calculated.	Active I Inactive*

* Factory setting

2. Test specification

Parameter	Description	Values
Result calculation	Select whether the nominal weight or the conventional mass value (CMV) is used for the result calculation. **On nominal weight**: Nominal value of a weight with a specific weight class. **On actual weight (CMV)**: Conventional mass value (CMV) of a weight from the weight calibration certificate.	On nominal weight* I On actual weight (CMV)

* Factory setting

Test point

Parameter	Description	Values
Nominal weight	Defines the nominal value of the weight that will be used for the test.	Numeric

Weight class	Defines the weight class according to OIML or ASTM. Alternatively, a customized tolerance class can be created with **Own**.	E1 I E2 I F1 I F2 I M1 I M2 I M3 I ASTM000 I ASTM00 I ASTM0 I ASTM0 I ASTM1 I ASTM2 I ASTM3 I ASTM4 I ASTM5 I ASTM6 I ASTM7 I Own*

* Factory setting

Eccentricity limits

Parameter	Description	Values
Control limit	Defines the error tolerance of a process with respect to its set value. Exceeding the **Control limit** is a violation of quality requirements and therefore requires a correction of the process. Result if the **Control limit** is exceeded: The test failed, the balance is out of specification.	Numeric
Warning limit	Defines the upper or lower limit that, if exceeded or not reached, makes more stringent process monitoring necessary. The **Warning limit** must be smaller than the **Control limit**. Result if the **Warning limit** is exceeded: The test is passed, but the difference is higher than expected.	Numeric

3. Test weights

A configured test weight can be selected. For information on test weights definition and settings, see [Test weights ▸ Page 43] and [Test weights settings ▸ Page 124].

4. Error management

Parameter	Description	Values
Block balance	Defines the behavior of the balance if a test has failed. **Active**: The balance will be blocked after a specified amount of failed tests. In this case, the balance cannot be used anymore until it is unblocked. If a password has been set, the password is needed to unblock the balance. See [Password protection and balance reset ▸ Page 68]. **Inactive**: The balance will not be blocked.	Active I Inactive*
Allowed number of retries	Defines the maximum allowed retries until the balance will be blocked. This setting is only available if **Block balance** is set to **Active**.	Numeric (3* I 0...9)

* Factory setting

5. Test planning

Parameter	Description	Values
Planning type	Specifies the schedule for the test to be performed. **Manually**: The test is performed manually. **Daily**: A task is generated every day at the specified time. **Weekly**: A task is generated at least once a week. Additional days can be selected if required. **Monthly**: A task is generated every month at the specified day and time. **Quarterly**: A task is generated every three months at the specified time. **Annually**: A task is generated once a year at the specified time.	Manually* I Daily I Weekly I Monthly I Quarterly I Annually

Start time	Defines the time when the test is due. This setting is only available if **Planning type** is not set to **Manually**.	Time

* Factory setting

Notification

This section does not appear when **Planning type** is set to **Manually**.

Parameter	Description	Values
(x) hours before test	Defines the number of hours before a notification informs about the upcoming planned test.	Different values depending on the selected frequency (Planning type).
Notification every (x) hours	Defines the time interval before the next notification is issued.	Different values depending on the selected frequency (Planning type).

Preferred days

This section only appears when **Planning type** is set to **Weekly**.

Parameter	Description	Values
Preferred days	Defines the preferred weekday for the execution of the test.	Monday* I Tuesday* I Wednesday* I Thursday* I Friday* I Saturday I Sunday

* Factory setting

Preferred day for execution

This section only appears when **Planning type** is set to **Monthly**.

Parameter	Description	Values
Day of the week	Defines the preferred day for execution of the test. If **None** is selected, the test will be scheduled for a month after the last execution.	None* I Monday I Tuesday I Wednesday I Thursday I Friday I Saturday I Sunday
Week of the month	Defines on which week of the month the test is performed. This setting is only available if **Day of the week** is not set to **None**.	First* I Second I Third I Fourth

* Factory setting

6. Printing

Parameter	Description	Values
Header and Footer	Defines the header and/or footer to be printed.	Title I Title text I Date/ time I User I Signature I Separating lines I Group titles
Balance information	Defines which information about the balance is printed.	Balance type I Balance ID I Balance serial number I Software version
Test summary	Defines which information about the test summary is printed.	Test type I Test name I Test result

Test details	Defines which test details are printed.	Test trigger I Leveling at start I Temperature I Preparation instructions I Test start (date / time) I Test end (date / time) I User name
Tare specification	Defines which information about the tare specification is printed. This section is only available for tests using a tare weight.	Tare name I Min. tare weight
Test weight	Defines which information about the test weight is printed.	Test weight ID I Weight class I Nominal weight I Actual weight I Weight set ID I Certificate ID I Certificate date I Next calibration date I Weight type I Minimum weight class I Used nominal weights I Used actual weights
Test limits	Defines which information about the test limits is printed.	Warning limit I Control limit
Measurements / Results	Defines which information about the measurements and the results is printed.	Weight I Deviation I State I Level state I Zero / Tare I Center deviation

See also

- Defining an individual test weight ▸ Page 43
- Defining a combined test weight ▸ Page 43
- Creating a new test ▸ Page 44

6.4.2 Settings: Repeatability test

Navigation: Methods > Tests > my repeatability test > Edit

1. Name and type

Parameter	Description	Values
Test type	The test type has been pre-defined and cannot be changed in this menu.	Available test types
Name	Defines the name of the test.	Text (1…22 characters)
Test activated	Enables/disables the test.	Active* I Inactive
Show preparation instructions	If activated, a predefined preparatory instruction is displayed in the test sequence.	Active* I Inactive
Automatic print	When activated, the test results are immediately printed on the enabled strip printer after the test result has been calculated.	Active I Inactive*

* Factory setting

2. Test specification

Parameter	Description	Values
Result calculation	Select whether the nominal weight or the conventional mass value (CMV) is used for the result calculation. **On nominal weight**: Nominal value of a weight with a specific weight class. **On actual weight (CMV)**: Conventional mass value (CMV) of a weight from the weight calibration certificate.	On nominal weight* I On actual weight (CMV)
Number of repetitions	Defines the number of weight measurements of a series.	Numeric (10* I 2...15)

* Factory setting

Tare

This section only appears when **Test type** is set to **Repeatab. - Tare - 1 TP**.

Parameter	Description	Values
Tare name	Defines a name for the tare weight.	Text (1...22 characters)
Minimum tare weight	Defines the minimum weight for the tare container. The test is only continued if a tare container with at least this weight is placed on the balance.	Numeric

* Factory setting

Test point

Parameter	Description	Values
Nominal weight	Defines the nominal value of the weight that will be used for the test.	Numeric
Weight class	Defines the weight class according to OIML or ASTM. Alternatively, a customized tolerance class can be created with **Own**.	E1 I E2 I F1 I F2 I M1 I M2 I M3 I ASTM000 I ASTM00 I ASTM0 I ASTM0 I ASTM1 I ASTM2 I ASTM3 I ASTM4 I ASTM5 I ASTM6 I ASTM7 I Own*

* Factory setting

Test limits

Parameter	Description	Values
Control limit	Defines the error tolerance of a process with respect to its set value. Exceeding the **Control limit** is a violation of quality requirements and therefore requires a correction of the process. The minimum value is 40% of the balance readability. Result if the **Control limit** is exceeded: The test failed, the balance is out of specification.	Numeric
Warning limit	Defines the upper or lower limit that, if exceeded or not reached, makes more stringent process monitoring necessary. The **Warning limit** must be smaller than the **Control limit**. Result if the **Warning limit** is exceeded: The test is passed, but the difference is higher than expected.	Numeric

3. Test weights

A configured test weight can be selected. For information on test weights definition and settings, see [Test weights ▸ Page 43] and [Test weights settings ▸ Page 124].

4. Error management

Parameter	Description	Values
Block balance	Defines the behavior of the balance if a test has failed. **Active**: The balance will be blocked after a specified amount of failed tests. In this case, the balance cannot be used anymore until it is unblocked. If a password has been set, the password is needed to unblock the balance. See [Password protection and balance reset ▸ Page 68]. **Inactive**: The balance will not be blocked.	Active I Inactive*
Allowed number of retries	Defines the maximum allowed retries until the balance will be blocked. This setting is only available if **Block balance** is set to **Active**.	Numeric (3* I 0...9)

* Factory setting

5. Test planning

Parameter	Description	Values
Planning type	Specifies the schedule for the test to be performed. **Manually**: The test is performed manually. **Daily**: A task is generated every day at the specified time. **Weekly**: A task is generated at least once a week. Additional days can be selected if required. **Monthly**: A task is generated every month at the specified day and time. **Quarterly**: A task is generated every three months at the specified time. **Annually**: A task is generated once a year at the specified time.	Manually* I Daily I Weekly I Monthly I Quarterly I Annually
Start time	Defines the time when the test is due. This setting is only available if **Planning type** is not set to **Manually**.	Time

* Factory setting

Notification

This section does not appear when **Planning type** is set to **Manually**.

Parameter	Description	Values
(x) hours before test	Defines the number of hours before a notification informs about the upcoming planned test.	Different values depending on the selected frequency (Planning type).
Notification every (x) hours	Defines the time interval before the next notification is issued.	Different values depending on the selected frequency (Planning type).

Preferred days

This section only appears when **Planning type** is set to **Weekly**.

Parameter	Description	Values
Preferred days	Defines the preferred weekday for the execution of the test.	Monday* I Tuesday* I Wednesday* I Thursday* I Friday* I Saturday I Sunday

* Factory setting

Preferred day for execution

This section only appears when **Planning type** is set to **Monthly**.

Parameter	Description	Values
Day of the week	Defines the preferred day for execution of the test. If **None** is selected, the test will be scheduled for a month after the last execution.	None* I Monday I Tuesday I Wednesday I Thursday I Friday I Saturday I Sunday
Week of the month	Defines on which week of the month the test is performed. This setting is only available if **Day of the week** is not set to **None**.	First* I Second I Third I Fourth

* Factory setting

6. Printing

Parameter	Description	Values
Header and Footer	Defines the header and/or footer to be printed.	Title I Title text I Date/ time I User I Signature I Separating lines I Group titles
Balance information	Defines which information about the balance is printed.	Balance type I Balance ID I Balance serial number I Software version
Test summary	Defines which information about the test summary is printed.	Test type I Test name I Test result I Standard deviation
Test details	Defines which test details are printed.	Test trigger I Leveling at start I Temperature I Preparation instructions I Test start (date / time) I Test end (date / time) I User name
Tare specification	Defines which information about the tare specification is printed. This section is only available for tests using a tare weight.	Tare name I Min. tare weight
Test weight	Defines which information about the test weight is printed.	Test weight ID I Weight class I Nominal weight I Actual weight I Weight set ID I Certificate ID I Certificate date I Next calibration date I Weight type I Minimum weight class I Used nominal weights I Used actual weights

Test limits	Defines which information about the test limits is printed.	Warning limit I Control limit
Measurements / Results	Defines which information about the measurements and the results is printed.	Weight I State I Level state I Zero / Tare

See also

- Defining an individual test weight ▸ Page 43
- Defining a combined test weight ▸ Page 43
- Creating a new test ▸ Page 44

6.4.3 Settings: Sensitivity test

Navigation: Methods > Tests > my sensitivity test > Edit

1. Name and type

Parameter	Description	Values
Test type	The test type has been pre-defined and cannot be changed in this menu.	Available test types
Name	Defines the name of the test.	Text (1…22 characters)
Test activated	Enables/disables the test.	Active* I Inactive
Show preparation instructions	If activated, a predefined preparatory instruction is displayed in the test sequence.	Active* I Inactive
Automatic print	When activated, the test results are immediately printed on the enabled strip printer after the test result has been calculated.	Active I Inactive*

* Factory setting

2. Test specification

Parameter	Description	Values
Result calculation	Select whether the nominal weight or the conventional mass value (CMV) is used for the result calculation. **On nominal weight**: Nominal value of a weight with a specific weight class. **On actual weight (CMV)**: Conventional mass value (CMV) of a weight from the weight calibration certificate.	On nominal weight* I On actual weight (CMV)

* Factory setting

Tare

This section only appears when the option **Test type** is set to **Sensitivity - Tare - 1 TP** or **Sensitivity - Tare - 2 TP**.

Parameter	Description	Values
Tare name	Defines a name for the tare weight.	Text (1…22 characters)
Minimum tare weight	Defines the minimum weight for the tare container. The test is only continued if a tare container with at least this weight is placed on the balance.	Numeric

Test point

Depending on the selected test, the following options can be defined for one or two test points:

Parameter	Description	Values
Nominal weight	Defines the nominal value of the weight that will be used for the test.	Numeric

Weight class	Defines the weight class according to OIML or ASTM. Alternatively, a customized tolerance class can be created with **Own**.	E1 I E2 I F1 I F2 I M1 I M2 I M3 I ASTM000 I ASTM00 I ASTM0 I ASTM0 I ASTM1 I ASTM2 I ASTM3 I ASTM4 I ASTM5 I ASTM6 I ASTM7 I Own*
Control limit	Defines the error tolerance of a process with respect to its set value. Exceeding the **Control limit** is a violation of quality requirements and therefore requires a correction of the process. Result if the **Control limit** is exceeded: The test failed, the balance is out of specification.	Numeric
Warning limit	Defines the upper or lower limit that, if exceeded or not reached, makes more stringent process monitoring necessary. The **Warning limit** must be smaller than the **Control limit**. Result if the **Warning limit** is exceeded: The test is passed, but the difference is higher than expected.	Numeric

* Factory setting

3. Test weights

A configured test weight can be selected. For information on test weights definition and settings, see [Test weights ▸ Page 43] and [Test weights settings ▸ Page 124].

4. Error management

Parameter	Description	Values
Block balance	Defines the behavior of the balance if a test has failed. **Active**: The balance will be blocked after a specified amount of failed tests. In this case, the balance cannot be used anymore until it is unblocked. If a password has been set, the password is needed to unblock the balance. See [Password protection and balance reset ▸ Page 68]. **Inactive**: The balance will not be blocked.	Active I Inactive*
Allowed number of retries	Defines the maximum allowed retries until the balance will be blocked. This setting is only available if **Block balance** is set to **Active**.	Numeric (3* I 0…9)

* Factory setting

5. Test planning

Parameter	Description	Values
Planning type	Specifies the schedule for the test to be performed. **Manually**: The test is performed manually. **Daily**: A task is generated every day at the specified time. **Weekly**: A task is generated at least once a week. Additional days can be selected if required. **Monthly**: A task is generated every month at the specified day and time. **Quarterly**: A task is generated every three months at the specified time. **Annually**: A task is generated once a year at the specified time.	Manually* I Daily I Weekly I Monthly I Quarterly I Annually

Start time	Defines the time when the test is due. This setting is only available if **Planning type** is not set to **Manually**.	Time

* Factory setting

Notification

This section does not appear when **Planning type** is set to **Manually**.

Parameter	Description	Values
(x) hours before test	Defines the number of hours before a notification informs about the upcoming planned test.	Different values depending on the selected frequency (Planning type).
Notification every (x) hours	Defines the time interval before the next notification is issued.	Different values depending on the selected frequency (Planning type).

Preferred days

This section only appears when **Planning type** is set to **Weekly**.

Parameter	Description	Values
Preferred days	Defines the preferred weekday for the execution of the test.	Monday* I Tuesday* I Wednesday* I Thursday* I Friday* I Saturday I Sunday

* Factory setting

Preferred day for execution

This section only appears when **Planning type** is set to **Monthly**.

Parameter	Description	Values
Day of the week	Defines the preferred day for execution of the test. If **None** is selected, the test will be scheduled for a month after the last execution.	None* I Monday I Tuesday I Wednesday I Thursday I Friday I Saturday I Sunday
Week of the month	Defines on which week of the month the test is performed. This setting is only available if **Day of the week** is not set to **None**.	First* I Second I Third I Fourth

* Factory setting

6. Printing

Parameter	Description	Values
Header and Footer	Defines the header and/or footer to be printed.	Title I Title text I Date/ time I User I Signature I Separating lines I Group titles
Balance information	Defines which information about the balance is printed.	Balance type I Balance ID I Balance serial number I Software version
Test summary	Defines which information about the test summary is printed.	Test type I Test name I Test result

Test details	Defines which test details are printed.	Test trigger I Leveling at start I Temperature I Preparation instructions I Test start (date / time) I Test end (date / time) I User name
Tare specification	Defines which information about the tare specification is printed. This section is only available for tests using a tare weight.	Tare name I Min. tare weight
Test weight	Defines which information about the test weight is printed.	Test weight ID I Weight class I Nominal weight I Actual weight I Weight set ID I Certificate ID I Certificate date I Next calibration date I Weight type I Minimum weight class I Used nominal weights I Used actual weights
Test limits	Defines which information about the test limits is printed.	Warning limit I Control limit
Measurements / Results	Defines which information about the measurements and the results is printed.	Weight I Deviation I State I Level state I Zero / Tare

See also

- Defining an individual test weight ▸ Page 43
- Defining a combined test weight ▸ Page 43
- Creating a new test ▸ Page 44

6.5 Adjustments settings

Navigation: Methods > Adjustments > Internal adjustment > Edit

1. Strategy

Parameter	Description	Values
Strategy	Defines the type of adjustment to be performed. When **Strategy** is set to **No adjustment** or **External adjustment**, no other settings are available. For approved balances, this setting is set to **Internal adjustment** and cannot be edited.	Internal adjustment* I External adjustment I No adjustment
Automatic print	When activated, the adjustment results are immediately printed on the enabled strip printer after the result has been calculated.	Active I Inactive*

* Factory setting

2. Specification

Parameter	Description	Values
"As found" test	At the start of the adjustment sequence, an internal sensitivity test is automatically performed to evaluate the current status. The test results are displayed and recorded.	Active I Inactive*
"As left" test	When the adjustment is complete, an internal sensitivity test is automatically performed. The test results are displayed and recorded.	Active I Inactive*

* Factory setting

Limits

These settings only appear when one of the options **"As found" test** or **"As left" test** is activated.

Parameter	Description	Values
Control limit	Defines the error tolerance of a process with respect to its set value. Exceeding the **Control limit** is a violation of quality requirements and therefore requires a correction of the process. Result if the **Control limit** is exceeded: The adjustment failed, the balance is out of specification.	Numeric (0.1%* I 0.001...100%)
Warning limit	Defines the upper or lower limit that, if exceeded or not reached, makes more stringent process monitoring necessary. The **Warning limit** must be smaller than the **Control limit**. Result if the **Warning limit** is exceeded: The adjustment is passed, but the difference is higher than expected.	Numeric (0.001...100%)

* Factory setting

3. Error management

Parameter	Description	Values
Block balance	Defines the behavior of the balance if the adjustment has failed. **Active**: The balance will be blocked after the adjustment has failed. In this case, the balance cannot be used anymore until it is unblocked. If a password has been set, the password is needed to unblock the balance. See [Password protection and balance reset ▸ Page 68]. **Inactive**: The balance will not be blocked.	Active I Inactive*

* Factory setting

4. Planning

Parameter	Description	Values
Start after leveling	Defines if the internal adjustment starts after leveling.	Active I Inactive*
Start after temperature change	Defines if the internal adjustment starts automatically after a temperature change of 1°C. For approved balances, this setting is set to **Internal adjustment** and cannot be edited. This restriction does not apply to balances of type /AC.	Active I Inactive*
Schedule	Defines when the adjustment is being performed. It is possible to define between one and three start times per day. It can also be defined on which day(s) the adjustment is being performed.	Inactive I 1 start time I 2 start times* I 3 start times
Start time 1	Defines the start time for the execution of the task. The number of start times to be defined is specified by **Schedule**.	Time
Preferred days	Defines the days for the scheduled adjustments. This setting is only available if **Schedule** is not set to **Inactive**.	Monday I Tuesday I Wednesday I Thursday I Friday I Saturday I Sunday

* Factory setting

5. Printing

Parameter	Description	Values
Header and Footer	Defines the header and/or footer to be printed.	Title I Title text I Date/ time I User I Signature I Separating lines I Group titles

Balance information	Defines which information about the balance is printed.	Balance type I Balance ID I Balance serial number I Software version
Adjustment summary	Defines which information about the adjustment summary is printed.	Adjustment type I Adjustment status I Balance adjusted
Adjustment details	Defines which adjustment details are printed.	Trigger I Cell temperature I Level state I Date/time I User name
Adjustment weight	Defines which information about the adjustment weight is printed. This section is only available if an external weight is used for the adjustment.	Test weight ID I Weight class I Nominal weight I Actual weight I Weight set ID I Certificate ID I Certificate date I Next calibration date I Weight type I Minimum weight class I Used nominal weights I Used actual weights
Adjustment limits	Defines which information about the adjustment limits is printed. This section is only available for internal adjustments.	Warning limit I Control limit
Measurements / Results	Defines which information about the measurements and the results is printed. The settings available in this section depends on the adjustment strategy.	Correction I Test deviation "as found" I Test deviation "as left" I Test result "as found" I Test result "as left"

See also

- Defining an individual test weight ▸ Page 43
- Defining a combined test weight ▸ Page 43
- Editing an "Internal adjustment" ▸ Page 52
- Editing an "External adjustment" ▸ Page 52

7 Maintenance

To guarantee the functionality of the balance and the accuracy of the weighing results, a number of maintenance actions must be performed by the user.

The appropriate maintenance interval depends on your standard operating procedure (SOP).

7.1 Maintenance tasks

Maintenance action	Recommended interval	Remarks
Performing an internal adjustment	• Daily • After cleaning • After leveling • After changing the location	see "Adjustments"
Performing routine tests (eccentricity test, repeatability test, sensitivity test). METTLER TOLEDO recommends to at least perform a sensitivity test.	• After cleaning • After assembling the balance • After a software update • Depending on your internal regulations (SOP)	see "Tests"
Cleaning	• After every use • After changing the substance • Depending on the degree of pollution • Depending on your internal regulations (SOP)	see "Cleaning"
Updating the software	• Depending on your internal regulations (SOP). • After a new software release.	see "Software update"

See also

- Adjustments ▸ Page 52
- Tests ▸ Page 43
- Cleaning ▸ Page 138
- Software update ▸ Page 142

7.2 Cleaning

7.2.1 Disassembling for cleaning

⚠ CAUTION

Injury due to sharp objects or broken glass

Instrument components, e.g., glass, can break and lead to injuries.

– Always proceed with focus and care.

1 Open the top door (1) and pull it all the way back, outside of the rails of the side doors. Shortly before the top panel drops out, you can feel a slight resistance. Just keep pulling a little bit tighter.

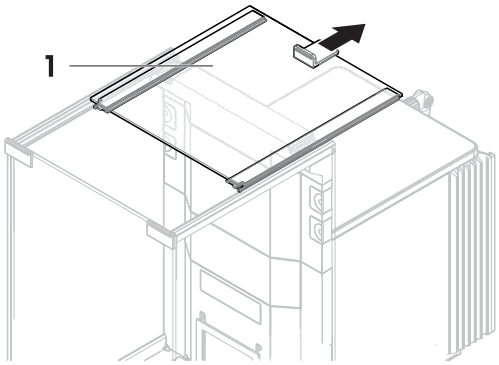

2 Hold the side doors (2) and push down the lever (3) to release them.

3 Carefully remove both side doors (2).

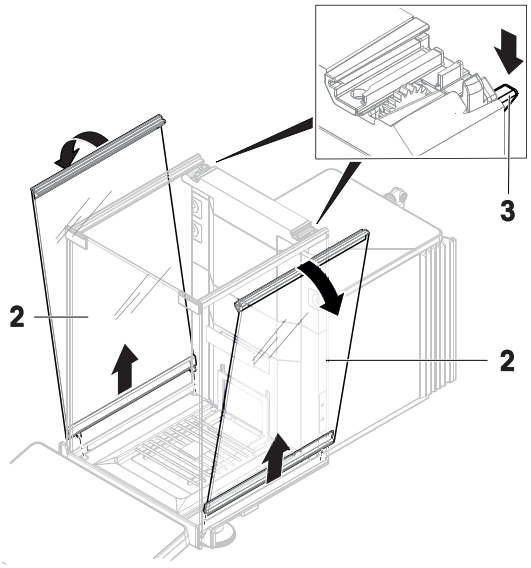

4 Tilt the front panel (4) to the front and remove it.

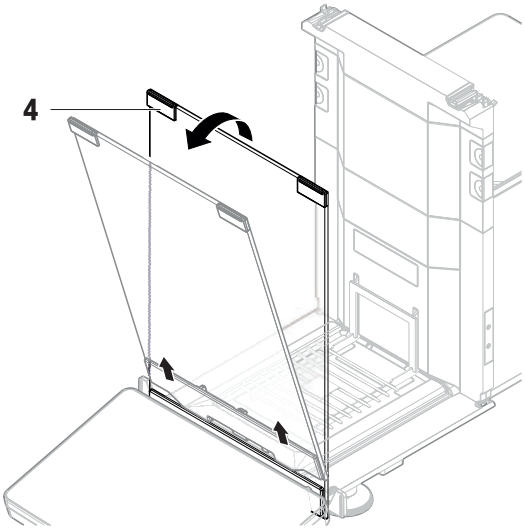

5 Carefully lift the weighing pan (5) to unhook it and pull it out.

6 Remove the drip tray (6).

7 Store all removed components in a safe place.

➡ The balance is ready for cleaning.

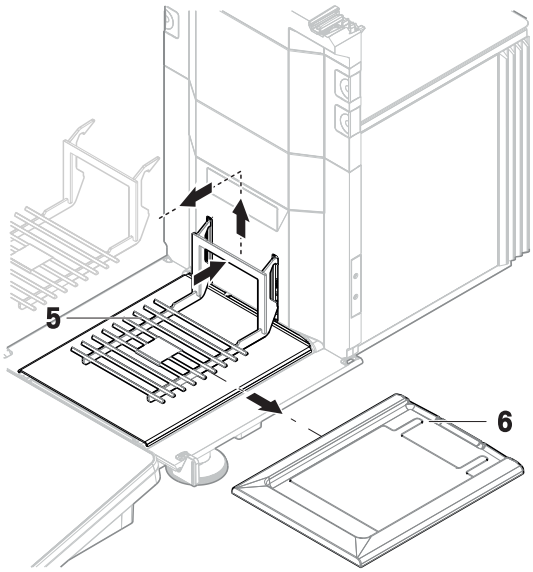

7.2.2 Cleaning agents

In the following table, cleaning tools and cleaning agents recommended by METTLER TOLEDO are listed. Pay attention to the concentration of the agents specified in the table.

		Tools			Cleaning agents						
		Paper tissue	**Brush**	**Dishwasher**	**Water**	**Acetone**	**Ethanol (70%)**	**Isopropanol (70%)**	**Hydrochloric acid (3-10%)**	**Sodium hydroxide (0.2-1.0 M)**	**Peracetic acid (2-3%)**
Around the balance	Balance housing	✓	R	—	R	—	R	✓	R	R	R
	Feet	✓	R	—	R	—	R	✓	R	R	R
Balance terminal	Terminal	✓	R	—	✓	PR	R	R	R	R	R
	Display	✓	—	—	✓	PR	R	R	R	R	R
	Terminal cover	✓	R	—	✓	—	R	R	R	PR	PR
Balance draft shield	Glass panels	✓	R	R	R	PR	✓	✓	R	R	R
	Non-removable handles and frames	✓	R	—	R	PR	✓	✓	R	R	R
Weighing area	Weighing pan	R	R	✓	R	R	✓	✓	R	R	R
	Drip tray	R	R	✓	R	R	✓	✓	—	—	R

Legend

✓ Best recommendation by METTLER TOLEDO; can be used without limitation.

R Recommended by METTLER TOLEDO; can be used without limitation.

PR Partially recommended by METTLER TOLEDO: individual resistance to acid and alkali must be evaluated, including dependence to the time exposure.

— Not recommend. High risk for damage.

7.2.3 Cleaning the balance

NOTICE

Damage to the instrument due to inappropriate cleaning methods

If liquid enters the housing, it can damage the instrument. The surface of the instrument can be damaged by certain cleaning agents, solvents, or abrasives.

1 Do not spray or pour liquid on the instrument.
2 Only use the cleaning agents specified in the Reference Manual (RM) of the instrument or the guide "8 Steps to a Clean Balance".
3 Only use a lightly moistened, lint-free cloth or a tissue to clean the instrument.
4 Wipe off any spills immediately.

For further information on cleaning a balance, consult "8 Steps to a Clean Balance".

www.mt.com/lab-cleaning-guide

Cleaning around the balance

– Remove any dirt or dust around the balance and avoid further contaminations.

Cleaning the terminal

– Clean the terminal with a damp cloth or a tissue and a mild cleaning agent.

Cleaning the removable parts

– Clean the removed part with a damp cloth or a tissue and a mild cleaning agent or clean in a dishwasher up to 80 °C.

Cleaning the weighing unit

1 Disconnect the balance from the AC/DC adapter.
2 Use a lint-free cloth moistened with a mild cleaning agent to clean the surface of the balance.
3 Remove powder or dust with a disposable tissue first.
4 Remove sticky substances with a damp lint-free cloth and a mild solvent, e.g., isopropanol or ethanol 70%.

7.2.4 Putting into operation after cleaning

1 Reassemble the balance.
2 Check that the draft shield doors (top, sides) open and close normally.
3 Check if the terminal is connected to the balance.
4 Reconnect the balance to the AC/DC adapter.
5 Check the level status, level the balance if necessary.
6 Respect the warm-up time specified in the "Technical Data".
7 Perform an internal adjustment.
8 Perform a routine test according to the internal regulations of your company. METTLER TOLEDO recommends performing a sensitivity test after cleaning the balance.
9 Press →0← to zero the balance.

➡ The balance is ready to be used.

See also

- Leveling the balance ▸ Page 28
- Technical Data ▸ Page 146
- Performing an internal adjustment ▸ Page 28
- Performing a "Sensitivity test" ▸ Page 49

7.3 Service

Regular servicing by an authorized service technician ensures reliability for years to come. Contact your METTLER TOLEDO representative for details about the available service options.

7.4 Software update

Search for software:

▶ www.mt.com/labweighing-software-download

Please contact a METTLER TOLEDO service representative if you need support updating the software.

METTLER TOLEDO recommends saving the data on a storage device before updating the software.

≡ **Navigation: ⚙ Balance menu > Maintenance > Software update**

See also

- Exporting and importing settings ▸ Page 66

7.4.1 Updating the software

- A USB storage device containing the software installer (zip file format) is connected to the balance.

1 Tap **Software update**.

2 Select **Update software** and tap **→Next**.

➡ An update wizard opens and will lead you step-by-step through the procedure.

7.4.2 Restoring the software to the previous version

The current software version can be rolled back to the previous software version.

1 Tap **Software update**.

2 Select **Restore the software to the previous version.** and tap **→ Next**.

➡ An update wizard opens and will lead you step-by-step through the procedure.

7.4.3 Putting into operation after software update

1 Press ⏻ to switch on the balance.

2 Check the level status, level the balance if necessary.

3 Perform an internal adjustment.

4 Perform a routine test according to the internal regulations of your company.

5 Press **→0←** to zero the balance.

➡ The balance is ready to be used.

8 Troubleshooting

Possible errors with their cause and remedy are described in the following chapter. If there are errors that cannot be corrected through these instructions, contact METTLER TOLEDO.

8.1 Error messages

Error message	Possible cause	Diagnostic	Remedy
Balance reset failed	Communication failure	–	Disconnect the power cable and reconnect after a few seconds.
The system has no valid date and time set	Low battery	–	Connect to the power outlet and let the battery charge for two to three days.
Weight cannot be determined	Data signal problems of electronics.	–	Disconnect the power cable and reconnect after a few seconds.
	Bad connection between the terminal and the weighing unit.	Check the cable for damage (kinked, twisted or broken pins).	Replace the terminal cable.
	A device error has occurred.	Check if a device error is listed in the service menu, see [Service menu ▸ Page 82]. Tap **Device errors**.	Note the error code and contact your METTLER TOLEDO service representative.
Cannot start adjustment	Initial zero was not reached when the balance was switched on.	–	Disconnect the power cable and reconnect after a few seconds.
Preventive performance optimization	The balance memory (RAM) is full.	–	Complete the current task. Disconnect the power cable and reconnect after a few seconds.

See also

Service menu ▸ Page 82

8.2 Error symptoms

Error symptom	Possible cause	Diagnostic	Remedy
The display is dark.	The instrument is on standby.	–	Switch on the instrument.
	There is no power.	Check the connection to the AC/DC adapter and the power outlet.	Connect the weighing unit to the power outlet. See "Connecting the balance".
	The terminal is not connected to the instrument.	Check the terminal cable connection.	Connect the terminal cable to the instrument.
	The terminal cable is defective.	Check the cable for damage (kinked, twisted or broken pins).	Replace the terminal cable.
	The wrong AC/DC adapter is connected to the instrument.	Check it, see "Technical Data".	Use the correct AC/DC adapter.

Error symptom	Possible cause	Diagnostic	Remedy
	The AC/DC adapter is defective.	–	Replace the AC/DC adapter.
The value on the display oscillates.	Vibrations on the weighing bench, e.g., building vibrations, foot traffic	Place a beaker with water on the weighing bench. Vibrations cause ripples on the water surface.	Protect the weighing location against vibrations, e.g. with an absorber. Find a different weighing location.
	Draft due to untight draft shield and/or open window.	Check the draft shield for gaps.	Fix the draft shield. Close the window.
	The weighing sample is electrostatically charged.	Check if the weighing result is stable when using a test weight.	Increase the air humidity in the weighing chamber. Use an ionizer. See "Accessories".
	The location is not suitable for weighing.	–	Follow the requirements for the location. See "Selecting the location".
	Something is touching the weighing pan.	Check for touching parts or dirt.	Remove touching parts. Clean the balance.
The value on the display is drifting towards plus or minus.	The weighing sample absorbs moisture or evaporates moisture.	Check if the weighing result is stable when using a test weight.	Cover the weighing sample.
	The weighing sample is electrostatically charged.	Check if the weighing result is stable when using a test weight.	Increase the air humidity in the weighing chamber. Use an ionizer. See "Accessories".
	The weighing sample is warmer or colder than the air in the weighing chamber.	Check if the weighing result is stable when using an acclimatized test weight.	Bring the sample to room temperature.
	The balance has not yet warmed up.	–	Let the balance warm up. Adequate warm-up time is specified in the "General data".
The display shows overload or underload.	The wrong weighing pan is installed.	Slightly lift or press the weighing pan to see if the weight appears on the display.	Install the proper weighing pan.
	No weighing pan is installed.	–	Install the proper weighing pan.
	Incorrect zero point at power on.	–	Disconnect the power cable and reconnect after a few seconds.
	The balance is not adjusted.	–	Perform a internal adjustment. See "Internal adjustment".
The draft shield front panel is not exactly 90° from the weighing platform	The draft shield front panel is not perfectly adjusted.	–	Contact your METTLER TOLEDO service representative to adjust the front panel.

Error symptom	Possible cause	Diagnostic	Remedy
The draft shield side doors are not exactly closed.	The draft shield side doors are not perfectly adjusted.	–	Contact your METTLER TOLEDO service representative to adjust the side doors.
The user interface responds slowly.	Too many results are included in the **Results list** of a task.	Check the **Results list** of every running and pending task.	Complete all tasks: For each task in the list of **Tasks**, select the task, tap **Continue task**, and tap **Complete**.

8.3 Putting into operation after fixing an error

After fixing an error, perform the following steps to put the balance into operation:

- Ensure that the balance is completely reassembled and cleaned.
- Reconnect the balance to the AC/DC adapter.

9 Technical Data

9.1 General data

Power supply

AC/DC adapter (model no. FSP060-DHAN3):	Input: 100 – 240 V AC ± 10%, 50 – 60 Hz, 1.8 A Output: 12 V DC, 5 A, LPS, SELV
AC/DC adapter (model no. FSP060-DIBAN2):	Input: 100 – 240 V AC ± 10%, 50 – 60 Hz, 1.5 A Output: 12 V DC, 5 A, LPS, SELV
Cable for AC/DC adapter:	3-core, with country-specific plug
Balance power consumption:	12 V DC ± 10%, 2.25 A
Polarity:	

Protection and standards

Overvoltage category:	II
Degree of pollution:	2
Standards for safety and EMC:	See Declaration of Conformity
Range of application:	Use only indoors in dry locations

Environmental conditions

The limit values apply when the balance is used under the following environmental conditions:

Height above mean sea level:	Up to 5000 m
Ambient temperature:	+10 – +30 °C
Temperature change, max.:	5 °C/h
Relative air humidity:	30 – 70%, non-condensing
Acclimatization time:	At least **8 hours** after placing the instrument in the same location where it will be put into operation.
Warm-up time:	At least **120 minutes** after connecting the balance to the power supply. When switched on from standby, the instrument is ready for operation immediately.

The balance can be used under the following environmental conditions. However, the weighing performances of the balance may be outside the limit values:

Ambient temperature:	+5 °C – +40 °C
Relative air humidity:	20% to max. 80% at 31 °C, decreasing linearly to 50% at 40 °C, non-condensing

The balance can be disconnected and stored in its packaging under the following conditions:

Ambient temperature:	-25 – +70 °C
Relative air humidity:	10 – 90%, non-condensing

9.2 Explanatory notes for the METTLER TOLEDO AC/DC adapter

The certified external AC/DC adapter complies to the requirements for Class II double insulated equipment. It is not provided with a protective earth connection but with a functional earth connection for EMC purposes. This earth connection **is not** a safety feature. Further information about the compliance of our products can be found in the "Declaration of Conformity" delivered with every product.

In case of testing with regard to the European Directive 2001/95/EC, the AC/DC adapter and the instrument have to be handled as Class II double insulated equipment.

Consequently, a grounding test is not required. It is not necessary to carry out a grounding test between the earth connector of the power plug and any exposed part of the metallic housing of the instrument.

Because the instrument is sensitive to static charges, a leakage resistor of 10 kΩ is connected between the earth connector (**1**) and the negative pole (**2**) of the AC/DC adapter. The arrangement is shown in the equivalent circuit diagram. This resistor is not part of the electrical safety arrangement and does not require testing at regular intervals.

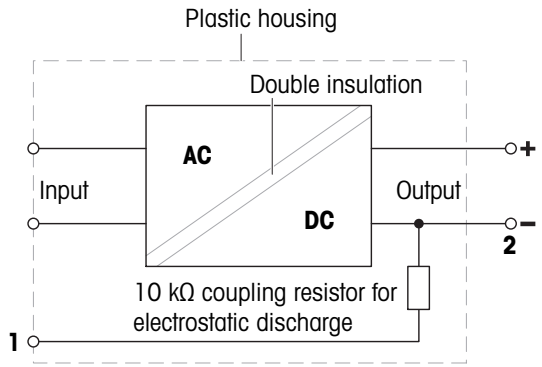

9.3 Model-specific data

	XSR105	XSR105DU	XSR205DU
Limit values			
Capacity	120 g	120 g	220 g
Nominal load	100 g	100 g	200 g
Readability	0.01 mg	0.1 mg	0.1 mg
Capacity of fine range	–	41 g	81 g
Readability in fine range	–	0.01 mg	0.01 mg
Repeatability (at nominal load)	0.04 mg	0.1 mg	0.1 mg
Repeatability (at 5% load)	0.02 mg	0.02 mg	0.02 mg
Linearity deviation	0.2 mg	0.2 mg	0.2 mg
Eccentricity deviation (at test load)	0.3 mg (50 g)	0.3 mg (50 g)	0.3 mg (100 g)
Sensitivity offset (at nominal load) ▲	0.4 mg	0.8 mg	0.8 mg
Sensitivity temperature drift	0.00015%/°C	0.00015%/°C	0.00015%/°C
Typical values			
Repeatability (at 5% load)	0.008 mg	0.01 mg	0.01 mg
Linearity deviation	0.06 mg	0.06 mg	0.06 mg
Eccentricity deviation (at test load)	0.1 mg (50 g)	0.1 mg (50 g)	0.1 mg (100 g)
Sensitivity offset (at nominal load) ▲	0.08 mg	0.2 mg	0.16 mg
Minimum weight (USP, tolerance = 0.10%) ▼	16 mg	20 mg	20 mg
Minimum weight (tolerance = 1%) ▼	1.6 mg	2 mg	2 mg
Settling time	3 s	1.5 s	1.5 s
Dimensions and other specifications			
Balance dimensions (W × D × H)	195 × 456 × 292 mm	195 × 456 × 292 mm	195 × 456 × 292 mm
Weighing pan dimensions (W × D)	78 × 73 mm	78 × 73 mm	78 × 73 mm
Usable height of draft shield	235 mm	235 mm	235 mm
Balance weight	8.6 kg	8.6 kg	8.6 kg
Weights for routine testing			
Weights (OIML class)	100 g (F2) / 5 g (F2)	100 g (F2) / 5 g (F2)	200 g (F2) / 10 g (F2)
Weights (ASTM class)	100 g (ASTM 1) / 5 g (ASTM 1)	100 g (ASTM 1) / 5 g (ASTM 1)	200 g (ASTM 1) / 10 g (ASTM 1)

▲ after adjustment with internal weight

▼ determined at 5% load, k = 2

	XSR225DU	XSR64	XSR104
Limit values			
Capacity	220 g	61 g	120 g
Nominal load	200 g	60 g	100 g
Readability	0.1 mg	0.1 mg	0.1 mg
Capacity of fine range	121 g	–	–
Readability in fine range	0.01 mg	–	–
Repeatability (at nominal load)	0.1 mg	0.1 mg	0.1 mg
Repeatability (at 5% load)	0.02 mg	0.07 mg	0.07 mg
Linearity deviation	0.2 mg	0.2 mg	0.2 mg
Eccentricity deviation (at test load)	0.3 mg (100 g)	0.15 mg (20 g)	0.3 mg (50 g)
Sensitivity offset (at nominal load) ▲	0.8 mg	0.6 mg	1 mg
Sensitivity temperature drift	0.00015%/°C	0.00015%/°C	0.00015%/°C
Typical values			
Repeatability (at 5% load)	0.01 mg	0.04 mg	0.04 mg
Linearity deviation	0.06 mg	0.06 mg	0.06 mg
Eccentricity deviation (at test load)	0.1 mg (100 g)	0.05 mg (20 g)	0.1 mg (50 g)
Sensitivity offset (at nominal load) ▲	0.16 mg	0.12 mg	0.2 mg
Minimum weight (USP, tolerance = 0.10%) ▼	20 mg	82 mg	82 mg
Minimum weight (tolerance = 1%) ▼	2 mg	8.2 mg	8.2 mg
Settling time	1.5 s	1.5 s	1.5 s
Dimensions and other specifications			
Balance dimensions (W × D × H)	195 × 456 × 292 mm	195 × 456 × 292 mm	195 × 456 × 292 mm
Weighing pan dimensions (W × D)	78 × 73 mm	78 × 73 mm	78 × 73 mm
Usable height of draft shield	235 mm	235 mm	235 mm
Balance weight	8.6 kg	8.6 kg	8.6 kg
Weights for routine testing			
Weights (OIML class)	200 g (F2) / 10 g (F2)	50 g (F2) / 2 g (F2)	100 g (F2) / 5 g (F2)
Weights (ASTM class)	200 g (ASTM 1) / 10 g (ASTM 1)	50 g (ASTM 1) / 2 g (ASTM 1)	100 g (ASTM 1) / 5 g (ASTM 1)

▲ after adjustment with internal weight

▼ determined at 5% load, k = 2

	XSR204	XSR204DR	XSR304
Limit values			
Capacity	220 g	220 g	320 g
Nominal load	200 g	200 g	300 g
Readability	0.1 mg	1 mg	0.1 mg
Capacity of fine range	–	81 g	–
Readability in fine range	–	0.1 mg	–
Repeatability (at nominal load)	0.1 mg	0.7 mg	0.1 mg
Repeatability (at 5% load)	0.07 mg	0.1 mg	0.08 mg
Linearity deviation	0.2 mg	0.5 mg	0.3 mg
Eccentricity deviation (at test load)	0.3 mg (100 g)	0.3 mg (100 g)	0.3 mg (100 g)
Sensitivity offset (at nominal load) ▲	1 mg	1 mg	1 mg
Sensitivity temperature drift	0.00015%/°C	0.00015%/°C	0.00015%/°C
Typical values			
Repeatability (at 5% load)	0.04 mg	0.04 mg	0.04 mg
Linearity deviation	0.06 mg	0.15 mg	0.1 mg
Eccentricity deviation (at test load)	0.1 mg (100 g)	0.1 mg (100 g)	0.1 mg (100 g)
Sensitivity offset (at nominal load) ▲	0.24 mg	0.24 mg	0.24 mg
Minimum weight (USP, tolerance = 0.10%) ▼	82 mg	82 mg	82 mg
Minimum weight (tolerance = 1%) ▼	8.2 mg	8.2 mg	8.2 mg
Settling time	1.5 s	1.5 s	1.5 s
Dimensions and other specifications			
Balance dimensions (W × D × H)	195 × 456 × 292 mm	195 × 456 × 292 mm	195 × 456 × 292 mm
Weighing pan dimensions (W × D)	78 × 73 mm	78 × 73 mm	78 × 73 mm
Usable height of draft shield	235 mm	235 mm	235 mm
Balance weight	8.6 kg	8.6 kg	8.6 kg
Weights for routine testing			
Weights (OIML class)	200 g (F2) / 10 g (F2)	200 g (F2) / 10 g (F2)	200 g (F2) / 10 g (F2)
Weights (ASTM class)	200 g (ASTM 1) / 10 g (ASTM 1)	200 g (ASTM 1) / 10 g (ASTM 1)	200 g (ASTM 1) / 10 g (ASTM 1)

▲ after adjustment with internal weight

▼ determined at 5% load, k = 2

9.4 Dimensions

9.4.1 XSR analytical balances

Models: XSR105, XSR105DU, XSR205DU, XSR225DU, XSR64, XSR104, XSR204, XSR204DR, XSR304

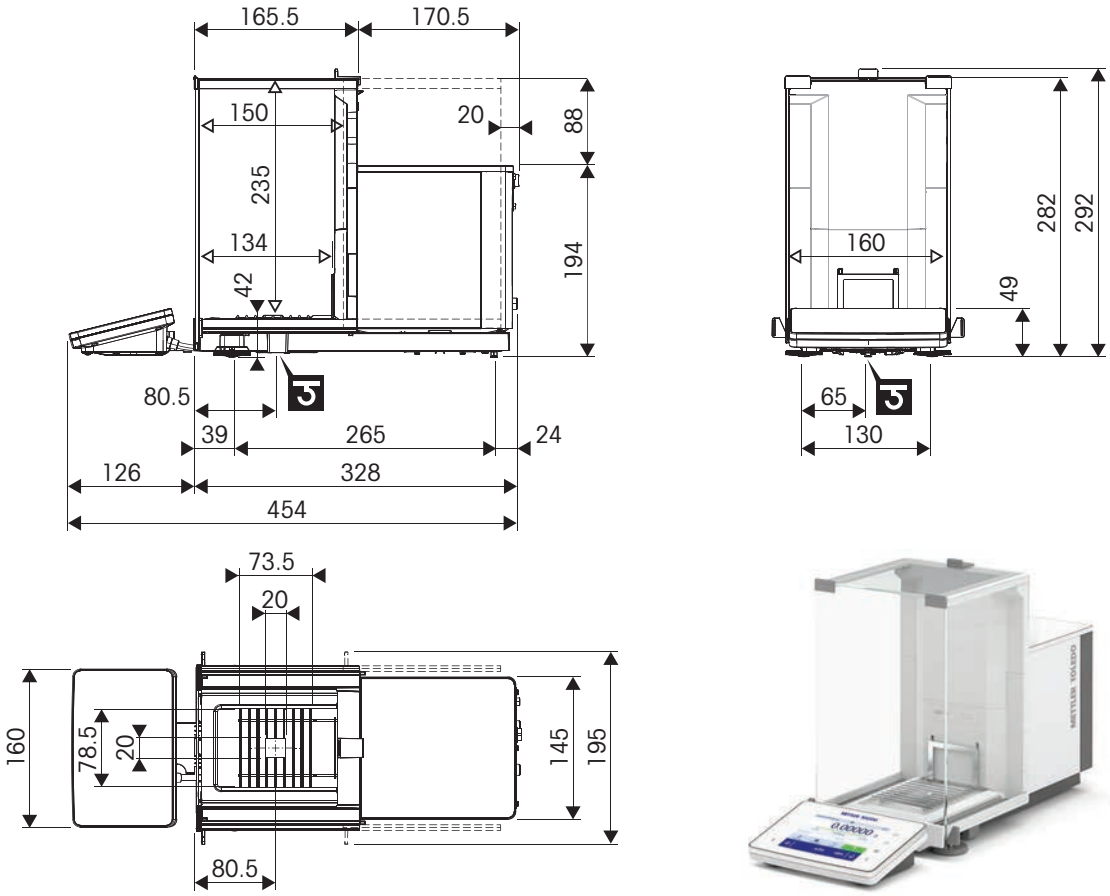

◄——►	Outer dimensions [mm]
◁——▷	Clear dimensions [mm]
Ƕ	Position of the weighing hook axle

10 Disposal

In conformance with the European Directive 2012/19/EU on Waste Electrical and Electronic Equipment (WEEE) this device may not be disposed of in domestic waste. This also applies to countries outside the EU, per their specific requirements.

Please dispose of this product in accordance with local regulations at the collecting point specified for electrical and electronic equipment. If you have any questions, please contact the responsible authority or the distributor from which you purchased this device. Should this device be passed on to other parties, the content of this regulation must also be related.

11 Accessories and Spare Parts

11.1 Accessories

Accessories are additional components that could help you in your workflow.

	Description	Order no.
Weighing pans		
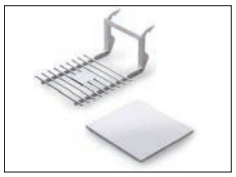	SmartGrid cover	11106709
	Single-use aluminium weighing pans, 10 units	11106711
ErgoClips		
	ErgoClip filter holder	30460844
	ErgoClip flask, small	30460854
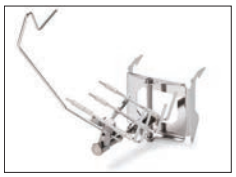	ErgoClip flask	30460842
	ErgoClip syringe	30460859
	ErgoClip tube	30460853

ErgoClip vial 30521808

ErgoClip Stand 11140170

ErgoClip Titration Basket 11106883

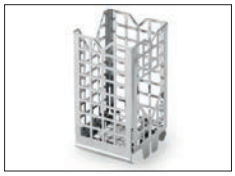

ErgoClip Basket 11106747

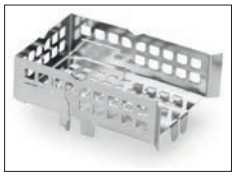

ErgoClip Weighing Boat 11106748

ErgoClip Round-Bottom Flask 11106746

Pipette calibration

SmartTrap beaker 50 ml, > 20 - 2000 µl 30215436

Evaporation trap 100 ml 30460847

Evaporation trap 6/20 ml 30460843

Antistatic kits

Universal AntiStatic Kit complete (U-shaped), including electrode and power supply 11107767

Optional: Second U-electrode* for universal AntiStatic Kit 11107764

* Power supply for optional, second U-electrode (11107764) 11107766

Compact ionizer with stand (USB) 30499859

Additional compact ionizer (USB) for Compact ionizer with stand (30499859) 30496446

Filter kits

Filter kit 30460857

Density determination

Density kit 30460852

Sinker 10 mL 210260

Calibrated Sinker 10mL 210672

	Calibrated Thermometer	11132685

Printers

	P-52RUE dot matrix printer RS232C, USB and Ethernet connections, simple print-outs	30237290
	Paper roll (length: 20 m), set of 5 pcs	00072456
	Paper roll (length: 13 m), self-adhesive, set of 3 pcs	11600388
	Ribbon cartridge, black, set of 2 pcs	00065975
	P-56RUE thermal printer with RS232C, USB and Ethernet connections, simple print-outs, date and time	30094673
	Paper roll, white (length: 27 m), set of 10 pcs	30094723
	Paper roll, white, self-adhesive (length: 13 m), set of 10 pcs	30094724
	P-58RUE thermal printer with RS232C, USB and Ethernet connections, simple print-outs, date and time, label printing, balance applications, e.g., statistics, formulation, totaling	30094674
	Paper roll, white (length: 27 m), set of 10 pcs	30094723
	Paper roll, white, self-adhesive (length: 13 m), set of 10 pcs	30094724
	Paper roll, white, self-adhesive labels (550 labels), set of 6 pcs	30094725
	Dimension of the label 56×18 mm	

Anti-theft devices

	Anti-theft cable with lock	11600361

Hands-free accessories

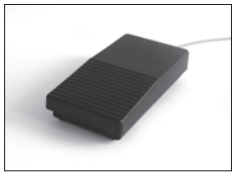	Foot switch, optional switch for remote operation (USB connection)	30312558
	ErgoSens, optical sensor for remote operation (USB connection)	30300915

Barcode readers

Corded USB barcode reader 30417466

Cables for RS232C interfaces

USB-RS232 cable with integrated null modem to connect peripherals and computers via RS232C to an XPR/XSR balance 30576241

Wireless interfaces

Bluetooth RS232C serial adapter ADP-BT-S 30086494

For wireless connection between:

- instrument and computer (depending on the instrument model)
- printer and instrument

Bluetooth USB adapter for wireless connection to P-5x printer 30416089

(additional Bluetooth RS232 serial adapter 30086494 required)

Weighing tables

Weighing table 11138042

Software

LabX Balance Express 11153120

Stand-alone system, includes one balance license.

LabX Balance Server 11153121

Client server system, includes one balance license.

LabX 1 Balance instrument license
Single additional instrument license for Express or Server edition. 11153220

Adjustment weights

OIML / ASTM Weights (with calibration certificate)
▶ www.mt.com/weights

Various

EasyHub USB 30468768

SmartPrep, single-use funnel for quick and easy sample preparation. For flask sizes 10/19, 12/21, 14/23. 50 pcs 30061260

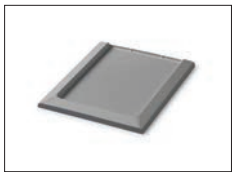

Drip tray, gray 30460856

Terminal cable, extended, length: 4.5 m 30300920

11.2 Spare parts

Spare parts are parts that are delivered with the original instrument but that can be replaced, if needed, without the help of a service technician.

11.2.1 Weighing chamber

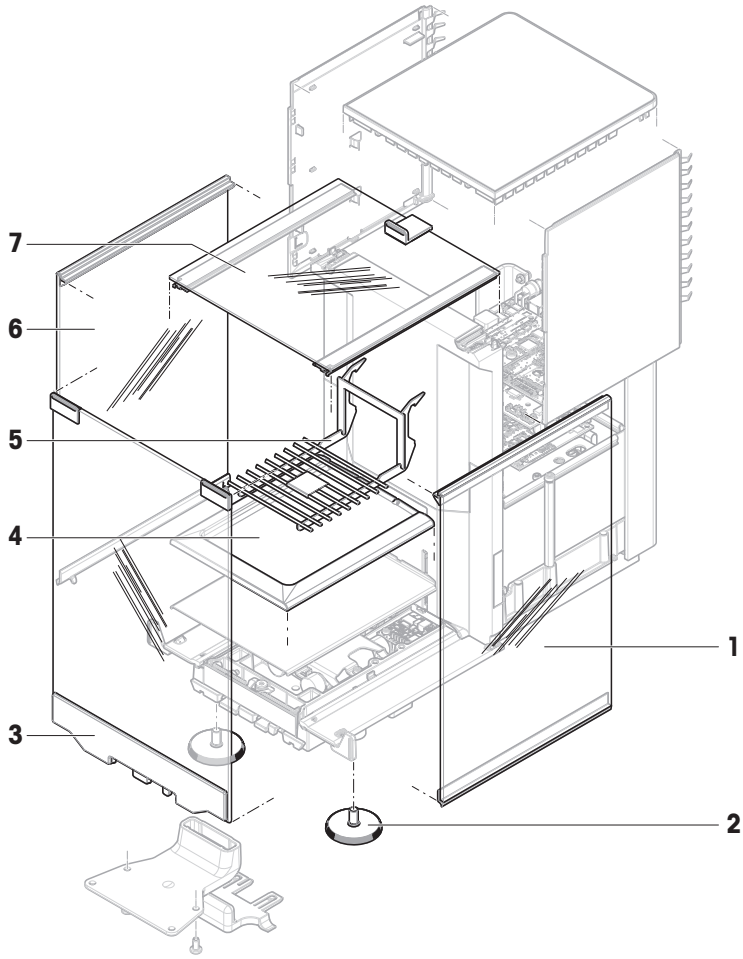

	Order no.	Designation	Remarks
1	30459875	Door right high draft shield	–
2	30460287	Leveling feet, set	Including: 2 leveling feet
3	30459877	Panel front high draft shield	–
4	30460282	Drip Tray XSR	–
5	30460285	Weighing pan SmartGrid XPR XSR	–
6	30459874	Door left high draft shield	–
7	30459876	Door top draft shield	–

11.2.2 Miscellaneous

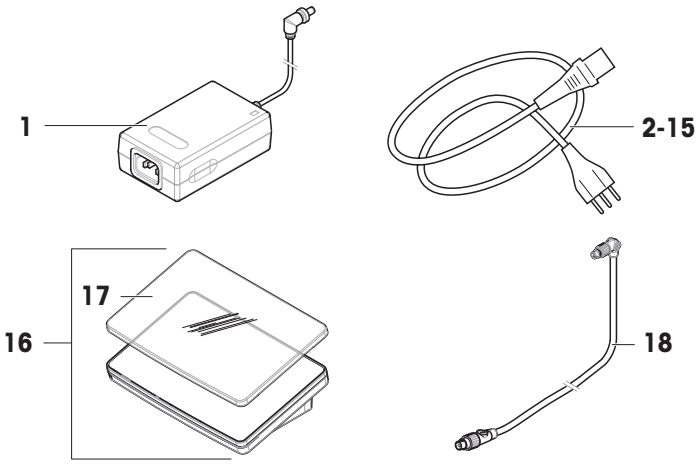

	Order no.	Designation	Remarks
1	30388323	AC/DC adapter	Output: 12 V DC, 5 A
2	88751	Power cable AU	–
3	30015268	Power cable BR	–
4	87920	Power cable CH	–
5	30047293	Power cable CN	–
6	87452	Power cable DK	–
7	87925	Power cable EU	–
8	89405	Power cable GB	–
9	225297	Power cable IL	–
10	11600569	Power cable IN	–
11	87457	Power cable IT	–
12	11107881	Power cable JP	–
13	11107880	Power cable TH, PE	–
14	88668	Power cable US	–
15	89728	Power cable ZA	–
16	30354537	Terminal SRAT	Including: protective cover
17	30300968	Protective cover	For terminal (SRAT, SRPT)
18	30416123	Cable, terminal	–

11.2.3 Packaging

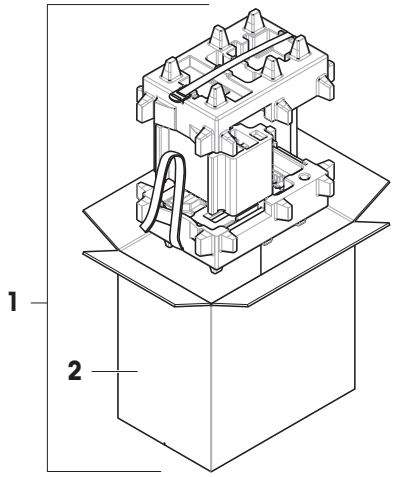

	Order no.	Designation	Remarks
1	30460297	Packaging	Including: Export box, inner protection material
2	30460298	Export box	Excluding: Inner protection material

12 Appendix

12.1 Approved balances

12.1.1 Definitions

Approved balances

Approved balances are balances that are subject to the local, legal requirements of "non-automatic weighing instruments", as defined in OIML R76. For approved balances, the net weighing results must comply with a higher level of control. Approved balances are used, for example, for legal metrology, for weight-based trading, or for determination of mass for the application of laws. The term "approved balance" includes legal-for-trade (LFT) balances, certified balances, and registered balances.

The restrictions and special behaviors of these balances are described in the present section as well as in specific balance settings throughout the manual.

To identify approved balances, the characters /M or /A are appended to the model names.

Actual scale interval, d

The value **d** represents the "actual scale interval". According to OIML R76-1 [T.3.2.2], it represents the difference between two consecutive indicated values. In some countries, the value **d** is defined as the "scale division" or the "scale division interval". In practice, it is often referred to as the "readability".

Verification scale interval, e

The value **e** represents the "verification scale interval" [OIML R76-1: T.3.2.3]. This value is used for the classification and verification of an instrument. It represents the absolute accuracy of the instrument and is relevant in the context of market surveillance.

The minimum value of the verification scale interval is 1 mg. [OIML R76-1: 3.2]

12.1.2 Descriptive markings

The descriptive markings of the instrument are on the model label, according to OIML R76-1 [7.1.4]:

- **Min**: minimum capacity
- **Max**: maximum capacity (referred to as "capacity" in this document)
- **e**: verification scale interval
- **d**: actual scale interval

The type label also contains those descriptive markings, as well as other metrological characteristics and limits of the instrument.

12.1.3 Restrictions on zeroing and taring

Zeroing the balance

- When switching on the balance, an initial zero is performed. If the load is more than 20% of the balance capacity during the initial zero, the zeroing is not possible and no weighing value is displayed. [OIML R76-1: T.2.7.2.4 and 4.5.1]
- During operation, the range for which a zero can be performed is ± 2% of the balance capacity. [OIML R76-1: 4.5.1]

Taring the balance

- It is not possible to tare the balance if the gross weight is negative. [OIML R76-1: 4.6.4]

12.1.4 Factory method: General Weighing

All balances are delivered with a factory method named **General Weighing**. For approved balances:

- The factory method cannot be deleted.
- The unit of the factory method **General Weighing** is set to **g** and cannot be edited.

- When switching on the balance, the factory method is shown on the weighing screen, regardless of which method was running when the balance was switched off.
- For the tolerance profile used by the factory method, the setting **Display readability** is set to **1d** and cannot be edited.

12.1.5 Representation of weighing results

The representation of weighing results from approved balances follows rules with respect to the weighing units, the weight value, and the indicator of the type of weight. These rules are described in the following paragraphs.

Unit

- A reduced set of units is available for selection.
- Units defined by the user (**Custom unit**) are restricted to characters that cannot be confused with other standard units. The following values are not allowed (uppercase and lowercase letters):
  - all common units, abbreviation or full name, for example, g, gram, kg, ct, oz, etc.
  - c, ca, car, cm, crt, cart, kt, gr, mgr, ugr, kgr, gra, mgra, ugra, kgra, grm, mgrm, ugrm, kgrm, mgram, ugram, kgram, k, kilo, to, tn, sh, tael, dram, dr, lboz, gramme, tonne, livre, once, lbt, cwt, dwt
  - all common units starting with the letter "o", where the "o" is replaced by the number "0", for example, 0z, 0zt, etc.
  - all common units where the letter "s" is added at the end

Weighing result

If the actual scale interval is smaller than the verification scale interval (**d** < **e**), the digits that are smaller than **e**, are called non-verified digits. For balances showing up to four digits (**d** ≥ 0.1 mg), the non-verified digits are marked. For example, a weight of 100 mg placed on a balance with **e** = 1 mg and **d** = 0.1 mg would be printed as `100.[0] mg`. [OIML R76-1: 3.4.1, 3.4.2]

- primary weight value on the main weighing screen: the non-verified digits are grayed out
- secondary weight value (**Info weight**) on the main weighing screen: the non-verified digits are grayed out
- **Results list**, detailed view: the non-verified digits are in brackets
- **Alibi memory**: the non-verified digits are in brackets
- Printout: the non-verified digits are in brackets
- Data export: no special marking

If custom units are used, the non-verified digits are not marked.

The depiction of the weight values does not affect the accuracy of the weighing results. That is consistent with legal metrology requirements.

Indicator for weighing result

The type of weighing result, such as **Net weight**, **Tare weight**, or **Gross weight**, is marked according to OIML R76-1 [T.5.2, T.5.3, 4.6.5, 4.6.11, 4.7].

Indicator	Main weighing screen	Results list	Printout
Net weight	Net	**Net weight**	**N**
Tare weight	–	**Tare weight**	**T**
Preset tare weight	–	**Preset tare weight**	**PT**
Gross weight	–	**Gross weight**	**G** [1]
Calculated weight	*	*	*
Unstable weight	o	**D**	**D**

[1] If only the gross weight is included on the printout, the indicator **G** is omitted.

Printout examples

The following examples refer to a balance with **e** = 1 mg and **d** = 0.1 mg. The tare or preset tare value is 200 mg, the gross weight is 743.2 mg and the net weight is 543.2 mg.

- with manual tare:

```
N        543.[2] mg
T        200.[0] mg
G        743.[2] mg
```

- with preset tare:

```
N      * 543.[2] mg
PT         200.0   mg
G          743.[2] mg
```

12.1.6 MT-SICS

The following commands are not available for approved balances:

- `C0`
  - It is not possible to change the adjustment type.
- `TI`
  - It is not possible to do an immediate tare. [OIML R76-1: 4.6.8]
- `ZI`
  - It is not possible to do an immediate zero. [OIML R76-1: 4.5.6]

12.1.7 Reference

OIML R 76-1 Edition 2006 (E), Non-automatic weighing instruments, Part 1: Metrological and technical requirements – Tests

Index

T

U

W

Z

GWP®

Good Weighing Practice™

GWP® is the global weighing standard, ensuring consistent accuracy of weighing processes, applicable to all equipment from any manufacturer It helps to:

- Choose the appropriate balance or scale
- Calibrate and operate your weighing equipment with security
- Comply with quality and compliance standards in laboratory and manufacturing

www.mt.com/GWP

www.mt.com/excellence-analytical

For more information

Mettler-Toledo GmbH
Im Langacher 44
8606 Greifensee, Switzerland
www.mt.com/contact

30419851G en

30419851